MDrive® Microstepping

MDrive and
Linear Actuator Products

IMS
INTELLIGENT MOTION
SYSTEMS, INC.

Schneider Electric

MDrive Microstepping Manual Change Log		
Date	Revision	Changes
07/24/2009	R072409	Reformated to current documentation standards and format. Combined all MDrive and MDrive Linear Actuators into single document.
08/21/2009	R082109	Removed MDrive42AC Plus information -- product discontinued.
10/29/2009	R102909	Added clock direction timing to Section 5. Added Connector Product Alert to to hardware sections.
11/24/2009	R112409	Linear Actuator support added
03/19/2010	R031910	Added support for DPM75 Drive Protection Module. Added installation and assembly instructions for the anti-backlash nut in the linear actuator secttions. Minor update, corrections

The information in IMS Schneider Electric Motion USA product manuals and on this web site has been carefully checked and is believed to be accurate; however, no responsibility is assumed for inaccuracies.

IMS Schneider Electric Motion USA reserves the right to make changes without further notice to any products to improve reliability, function or design. IMS Schneider Electric Motion USA does not assume any liability arising out of the application or use of any product or circuit described; neither does it convey any license under its patent rights of others.

IMS Schneider Electric Motion USA's general policy does not recommend the use of its products in life support or aircraft applications wherein a failure or malfunction of the product may directly threaten life or injury. Per IMS Schneider Electric Motion USA's terms and conditions of sales, the user of IMS Schneider Electric Motion USA products in life support or aircraft applications assumes all risks of such use and indemni es IMS Schneider Electric Motion USA against all damages.

Copyright © Schneider Electric Motion USA, All Rights Reserved

Important information

The drive systems described here are products for general use that conform to the state of the art in technology and are designed to prevent any dangers. However, drives and drive controllers that are not speci cally designed for safety functions are not approved for applications where the functioning of the drive could endanger persons. The possibility of unexpected or un-braked movements can never be totally excluded without additional safety equipment. For this reason personnel must never be in the danger zone of the drives unless additional suitable safety equipment prevents any personal danger. This applies to operation of the machine during production and also to all service and maintenance work on drives and the machine. The machine design must ensure personal safety. Suitable measures for prevention of property damage are also required.

Quali cation of personnel

Only technicians who are familiar with and understand the contents of this manual and the other relevant documentation are authorized to work on and with this drive system. The technicians must be able to detect potential dangers that may be caused by setting parameters, changing parameter values and generally by the operation of mechanical, electrical and electronic equipment.

The technicians must have suf cient technical training, knowledge and experience to recognise and avoid dangers.

The technicians must be familiar with the relevant standards, regulations and safety regulations that must be observed when working on the drive system.

Intended Use

The drive systems described here are products for general use that conform to the state of the art in technology and are designed to prevent any dangers. However, drives and drive controllers that are not speci cally designed for safety functions are not approved for applications where the functioning of the drive could endanger persons. The possibility of unexpected or unbraked movements can never be totally excluded without additional safety equipment.

For this reason personnel must never be in the danger zone of the drives unless additional suitable safety equipment prevents any personal danger. This applies to operation of the machine during production and also to all service and maintenance work on drives and the machine. The machine design must ensure personal safety. Suitable measures for prevention of property damage are also required.

In all cases the applicable safety regulations and the speci ed operating conditions, such as environmental conditions and speci ed technical data, must be observed.

The drive system must not be commissioned and operated until completion of installation in accordance with the EMC regulations and the speci cations in this manual. To prevent personal injury and damage to property damaged drive systems must not be installed or operated.

Changes and modi cations of the drive systems are not permitted and if made all no warranty and liability will be accepted.

The drive system must be operated only with the speci ed wiring and approved accessories. In general, use only original accessories and spare parts.

The drive systems must not be operated in an environment subject to explosion hazard (ex area).

This page intentionally left blank

Table of Contents

Part 1: General Usage

1 Introduction 1-1
2 Safety 2-1
3 Power supply selection and connection 3-1
4 Communications and parameter setup 4-1
5 Interfacing logic inputs 5-1
6 Minimum connection requirements 6-1

Part 2: Detaled speci cations and connectivity information: MDrive

MDrive14Plus
1 Introduction 1-1
2 Speci cations 2-1
3 Mounting and connection recommendations 3-1
4 Connection and interface 4-1

MDrive17Plus
1 Introduction 1-1
2 Speci cations 2-1
3 Mounting and connection recommendations 3-1
4 Connection and interface 4-1

MDrive23Plus
1 Introduction 1-1
2 Speci cations 2-1
3 Mounting and connection recommendations 3-1
4 Connection and interface 4-1

MDrive34Plus
1 Introduction 1-1
2 Speci cations 2-1
3 Mounting and connection recommendations 3-1
4 Connection and interface 4-1

MDrive34 AC Plus
1 Introduction 1-1
2 Speci cations 2-1
3 Connection and interface 4-1

Part 3: Detaled speci cations and connectivity information: MDrive Linear Actuators

MDrive14 Linear Actuator
1 Introduction 1-1
2 Speci cations 2-1
3 Mounting and connection recommendations 3-1
4 Connection and interface 4-1

MDrive 17 Linear Actuator
1 Introduction 1-1
2 Speci cations 2-1
3 Mounting and connection recommendations 3-1
4 Connection and interface 4-1

Revision R031910

MDrive23 Linear Actuator

1 Introduction 1-1
2 Speci cations 2-1
3 Mounting and connection recommendations 3-1
4 Connection and interface 4-1

Revision R031910

MDrive® Microstepping

Part 1: General Usage

1. Introduction
2. Safety
3. Interfacing DC power
4. Interfacing AC power
5. Communications and parameter setup
6. Interfacing logic

This page intentionally left blank

Table of Contents

Important information 3
Quali cation of personnel 3
Intended Use 3

1 Introduction 1-1
1.1 MDrive versions 1-1
1.2 Documentation reference 1-2
1.3 Product software 1-2
1.3.1 Communications converter drivers 1-2
1.3.2 SPI motor interface 1-2

2 Safety 1
2.1 Quali cation of personnel 1
2.2 Intended Use 1
2.3 Hazard Categories 2
2.4 General safety instructions 2

3 Power supply selection and connection 3-1
3.1 Selecting a power supply (+V) 3-2
3.1.1 Power supply — motor relationship 3-2
3.1.2 Power supply — driver relationship 3-2
3.1.3 Regulated vs unregulated 3-2
3.3 Power supply cabling best practices 3-3
3.3.1 DC Cabling Under 50’ (15.24 m) 3-4
3.3.2 50’ (15.24 m) or greater, AC power to full wave .... bridge 3-4
3.3.3 50’ (15.24 m) or greater, AC power DC supply.. 3-5
3.3.4 Recommended power supply cable wire gauges 3-5
3.4 Switching DC power (DPM75 accessory) 3-6

4 Interfacing AC power 4-1
4.1 Applicability 4-1
4.2 Interfacing AC voltage 4-2
4.3 MD-CS20x-000 cordset 4-2

5 Communications and parameter setup 5-1
5.1 SPI communications interface 5-1
5.1.1 SPI de nition 5-1
5.1.3 SPI connection methods 5-2
5.1.4 SPI Timing 5-6
5.1.5 SPI Commands and parameters 5-7
5.1.6 SPI Communications sequence 5-9
5.2 SPI Motor Interface 5-9
5.2.1 System Requirements 5-9
5.2.2 Installation 5-9
5.2.3 Connect to the SPI port 5-10
5.2.4 Setup Parameters 5-11
5.2.5 Color coded parameter values 5-11
5.2.7 Motor settings con guration screen 5-12
5.2.8 I/O settings con guration screen 5-14
5.2.9 IMS part number/serial number screen 5-16
5.2.10 Fault codes 5-16

Revision R031910

5.2.10 Upgrading the rmware 5-17

5 Interfacing logic inputs 6-1
6.1 Logic inputs (universal input version) 6-2
6.1.1 Logic inputs 6-2
6.1.2 Optically isolated input description 6-3
6.1.3 Optocoupler reference input 6-4
6.1.4 Interfacing the isolated logic inputs 6-5
6.2 Logic inputs (differential input version) 6-6
6.2.1 Logic inputs 6-6
6.2.2 Connection and interface 6-6

7 Minimum connection requirements 6-1
7.1 Minimum connection requirements 6-2

List of Figures

Figure 3.1 DC power supply cabling under 50’ (15.24 m) 3-4
Figure 3.2 50’ (15.24 m) or greater, AC power to full wave bridge 3-5
Figure 3.3 50’ (15.24 m) or greater, AC power to DC supply 3-5
Figure 3.4 DPM75 basic wiring and connection 3-6
Figure 4.1 Euro AC connector (P3) 4-2
Figure 4.2 MD-CS20x-000 4-2
Figure 5.1 Single SPI master - single MDrive slave 5-2
Figure 5.2 Single SPI master - Independent MDrive slaves 5-3
Figure 5.3 Single SPI master - Cooperative MDrive slaves 5-4
Figure 5.4 Logic level shifting and conditioning circuit 5-5
Figure 5.5 SPI Timing 5-6
Figure 5.6 SPI Commands and parameters 5-8
Figure 5.7 SPI Motor Interface startup dialog 5-10
Figure 5.8 SPI Motor Interface parameter setup dialog 5-10
Figure 5.9: SPI Motor Interface motion settings screen 5-12
Figure 5.10: SPI Motor Interface I/O settings screen 5-14
Figure 5.11: SPI Motor Interface part number serial number screen 5-16
Figure 6.1 Universal optically isolated input equivalent circuit 6-2
Figure 6.1 Step /direction signal timing 6-3
Figure 6.2 CW/CCW signal timing 6-3
Figure 6.3 A/B quadrature signal timong 6-4
Figure 6.4 Open collector sinking input 6-5
Figure 6.5 Open collector sourcing input 6-5
Figure 6.6 Switch interface sinking input 6-5
Figure 6.7 Switch interface sourcing input 6-5
Figure 6.8 Differential line-driven input interface 6-6
Figure 6.1 Minimum connections, open-collector sinking con guration 6-2
Figure 6.2 Minimum connections, open-collector sourcing con guration 6-2

List of Tables

Table 3.1 Power supply cable AWG recommendations 3-5
Table 4.1 AC standard wire colors 4-2
Table 5.1 SPI Commands and Parameters 5-7
Table 5.2 MDrive setup parameters 5-11
Table 5.3 Microstep resolution settings 5-13
Table 5.4 Input clock filter settings 5-15
Table 5.5 Fault error codes 5-16
Table 6.1 Universal logic inputs 6-2
Table 6.2 Differential logic inputs 6-5

Revision R031910

Page intentionally left blank

1 Introduction

The MDrive Microstepping high torque integrated motor and step and direction driver is ideal for designers who want the simplicity of a motor with on-board electronics. The integrated electronics of the MDrive eliminate the need to run motor cabling through the machine, reducing the potential for problems due to electrical noise

The MDrive uses high torque brushless step motors integrated with a microstepping driver, and accepts up to 20 resolution settings from full to 256 microsteps per full step, including: degrees, metric and arc minutes. These settings may be changed on-the- y or downloaded and stored in nonvolatile memory with the use of SPI Motor Interface, a simple software tool which is provided. This eliminates the need for external switches or resistors. Parameters are changed via an SPI port.

The MDrive microstepping is a compact, powerful and cost effective solution that will reduce system cost, design and assembly time for a large range of brushless step motor applications.

1.1 MDrive versions

MDrive

The MDrive is available in the following power ranges and ange sizes:

+12 to +48 VDC

- NEMA 14
- NEMA 17

+12 to +75 VDC

- NEMA 23
- NEMA 34

120 and 240 VAC

- NEMA 34

MDrive Linear Actuator

The MDrive Linear Actuator is available in the following power ranges and ange sizes:

- NEMA 14
- NEMA 17

+12 to +75 VDC

- NEMA 23

Revision R031910

1.2 Documentation reference

The following user's manuals are available for the MDrive:

- Product hardware manual, describes the technical data, installation and con guration of the product.
- Quick Reference, describes the basic wiring, connection and use of this product. The quick reference is shipped in printed form with the product.

This documentation is also available for download from the IMS web site at http://www.imshome.com

1.3 Product software

1.3.1 Communications converter drivers

If using the IMS communications converter, drivers are required, these drivers are available for download from the IMS web site at http://www.imshome.com/downloads/cable_drivers.html.

1.3.2 SPI motor interface

The MDrive microstepping is con gured using the SPI motor interface, a GUI that grants access to all the features of the MDrive microstepping and automatically detects the model MDrive being con gured.

Installation and usages instructions are to be found in Section 5 of this document.

This software may be downloaded from http://www.imshome.com/downloads/software_interfaces.html

2 Safety

2.1 Quali cation of personnel

Only technicians who are familiar with and understand the contents of this manual and the other relevant documentation are authorized to work on and with this drive system. The technicians must be able to detect potential dangers that may be caused by setting parameters, changing parameter values and generally by the operation of mechanical, electrical and electronic equipment.

The technicians must have suf cient technical training, knowledge and experience to recognise and avoid dangers.

The technicians must be familiar with the relevant standards, regulations and safety regulations that must be observed when working on the drive system.

2.2 Intended Use

The drive systems described here are products for general use that conform to the state of the art in technology and are designed to prevent any dangers. However, drives and drive controllers that are not speci cally designed for safety functions are not approved for applications where the functioning of the drive could endanger persons. The possibility of unexpected or unbraked movements can never be totally excluded without additional safety equipment.

For this reason personnel must never be in the danger zone of the drives unless additional suitable safety equipment prevents any personal danger. This applies to operation of the machine during production and also to all service and maintenance work on drives and the machine. The machine design must ensure personal safety. Suitable measures for prevention of property damage are also required.

In all cases the applicable safety regulations and the speci ed operating conditions, such as environmental conditions and speci ed technical data, must be observed.

The drive system must not be commissioned and operated until completion of installation in accordance with the EMC regulations and the speci cations in this manual. To prevent personal injury and damage to property damaged drive systems must not be installed or operated.

Changes and modi cations of the drive systems are not permitted and if made no warranty and liability will be accepted.

The drive system must be operated only with the speci ed wiring and approved accessories. In general, use only original accessories and spare parts.

Revision R031910

The drive systems must not be operated in an environment subject to explosion hazard (ex area).

2.3 Hazard Categories

Safety notes and general information are indicated by hazard messages in the manual. In addition there are symbols and instructions af xed to the product that warn of possible hazards and help to operate the product safely.

Depending on the seriousness of the hazard, the messages are divided into three hazard categories.

⚠ DANGER

DANGER indicates an imminently hazardous situation, which, if not avoided, **will result** in death, serious injury, or equipment damage.

⚠ WARNING

WARNING indicates a potentially hazardous situation, which, if not avoided, **can result** in death, serious injury, or equipment damage.

⚠ CAUTION

CAUTION indicates a potentially hazardous situation, which, if not avoided, **can result** in injury or equipment damage.

2.4 General safety instructions

⚠ DANGER

EXPOSED SIGNALS

Hazardous voltage levels may be present if using an open frame power supply to power the product.

Failure to follow these instructions will result in death or serious injury.

⚠ WARNING

LOSS OF CONTROL

- Observe the accident prevention regulations. (For USA see also NEMA ICS1.1 and NEMA ICS7.1)
- The system manufacturer must take the potential error possibilities of the signals and the critical functions into account to ensure a safe status during and after errors. Some examples are: emergency stop, nal position limitation, power failure and restart.
- The assessment of error possibilities must also include unexpected delays and the failure of signals or functions.
- Suitable redundant control paths must be in place for dangerous functions.
- Check that measures taken are effective.

Failure to follow these instructions can result in death or serious injury.

⚠ CAUTION

HOT PLUGGING!

Do not connect or disconnect power, logic, or communications while the device is in a powered state.

Remove DC power by powering down at the AC side of the DC power supply.

Failure to follow these instructions can result in equipment damage.

⚠ CAUTION

UL CONFORMITY

To meet UL conformity speci cation the MD-CS20x-000 cordset or Lumberg equivalent AC power cord must be used.

This caution applies to 120 and 240 VAC MDrives only.

This page has been intentionally left blank.

3 Power supply selection and connection

⚠ DANGER

EXPOSED SIGNALS

Hazardous voltage levels may be present if using an open frame power supply to power the product.

Failure to follow these instructions will result in death or serious injury.

⚠ CAUTION

MAXIMUM VOLTAGE INPUT

Do not exceed the maximum rated voltage of the device! Motor Back EMF, power supply ripple and high line must be taken into account when selecting a power supply voltage level.

Failure to follow these instructions may result in damage to system components!

⚠ CAUTION

GENERAL POWER SUPPLY PRACTICE

Do not connect or disconnect the power supply while power is applied.

Disconnect the AC side to power down the DC supply.

For battery operated systems connect a “transient suppressor” across the switch to prevent arcs and high-voltage spikes.

Failure to follow these instructions may result in damage to system components!

⚠ CAUTION

HOT PLUGGING!

Do not connect or disconnect power, logic, or communications while the device is in a powered state.

Remove DC power by powering down at the AC side of the DC power supply.

Failure to follow these instructions may result in damage to system components!



Detailed speci cations, voltage limits, current requirements and connectivity information are located in the product detail section corresponding to the MDrive linear actuator model you purchased.

3.1 Selecting a power supply (+V)

Proper selection of a power supply to be used in a motion system is as important as selecting the drive itself. When choosing a power supply for a stepping motor driver, there are several performance issues that must be addressed. An undersized power supply can lead to poor performance and possibly even damage to your drive.

3.1.1 Power supply — motor relationship

Motor windings can basically be viewed as inductors. Winding resistance (R) and inductance (L) result in an L/R time constant that resists the change in current. To effectively manipulate the rate of charge, the voltage applied is increased. When traveling at high speeds, there is less time between steps to reach current. The point where the rate of commutation does not allow the driver to reach full current is referred to as voltage mode. Ideally you want to be in current mode, which is when the drive is achieving the desired current between steps. Simply stated, a higher voltage will decrease the time it takes to charge the coil and, therefore, will allow for higher torque at higher speeds.

Another characteristic of all motors is back EMF. Back EMF is a source of current that can push the output of a power supply beyond the maximum operating voltage of the driver. As a result, damage to the stepper driver could occur over a period of time. This is especially prevalent with overhauling loads.

3.1.2 Power supply — driver relationship

The MDrive linear actuator is very current ef cient as far as the power supply is concerned. Once the motor has charged one or both windings of the motor, all the power supply has to do is replace losses in the system. The charged winding acts as an energy storage in that the current will recirculate within the bridge and in and out of each phase reservoir. This results in a less than expected current draw on the power supply.

Stepping motor drivers are designed with the intent that a user's power supply output will ramp up to greater than or equal to the minimum operating voltage of the drive. The initial current surge is substantial and could damage the driver if the supply is undersized. The output of an undersized power supply could fall below the operating range of the driver upon a current surge. This could cause the power supply to start oscillating in and out of the voltage range of the driver and result in damage to either the supply, the driver, or both.

There are two types of supplies commonly used, regulated and unregulated, both of which can be switching or linear. Each have advantages and disadvantages.

3.1.3 Regulated vs unregulated

An unregulated linear supply is less expensive and more resilient to current surges, however, the voltage decreases with increasing current draw. This may cause problems if the voltage drops below the working range of the drive.

Fluctuations in line voltage are also a point of concern. These fluctuations may cause the unregulated linear supply to be above or below the anticipated or acceptable voltage.

A regulated supply maintains a stable output voltage, which is good for high speed performance. These supplies are also not affected by line fluctuations, however, they are more expensive. Depending on the current regulation, a regulated supply may crowbar or current clamp and lead to an oscillation that, as previously stated, can cause damage to the driver and/or supply. Back EMF can cause problems for regulated supplies as well. The current regeneration may be too large for the regulated supply to absorb. This could lead to an over voltage condition which could damage the output circuitry of the MDrive.

Non IMS switching power supplies and regulated linear supplies with over current protection are not recommended because of their inability to handle the surge currents inherit in stepping motor systems.

See the product detail section of this document for specific power supply voltage and current requirements and recommended power supplies.

3.3 Power supply cabling best practices and recommendations

⚠ CAUTION

EMI and RFI

These recommendations will provide optimal protection against EMI and RFI. The actual cable type, wire gauge, shield type and filtering devices used are dependent on the customer's application and system.

The length of the DC power supply cable to an MDrive should not exceed 50 feet.

Always use Shielded/Twisted Pairs for the MDrive DC Supply Cable and the AC Supply Cable.

Failure to follow these instructions may result in damage to system components!

Cable length, wire gauge and power conditioning devices play a major role in the performance of your MDrive.

Figure 3.1 illustrates the recommended cable configuration for DC power supply cabling under 50 feet long. If cabling of 50 feet or longer is required, the additional length may be gained by adding an AC power supply cable (see Figures 3.2 and 6.3).

Correct AWG wire size is determined by the current requirement plus

cable length. Please see Table 3.1.

3.3.1 DC Cabling Under 50’ (15.24 m)

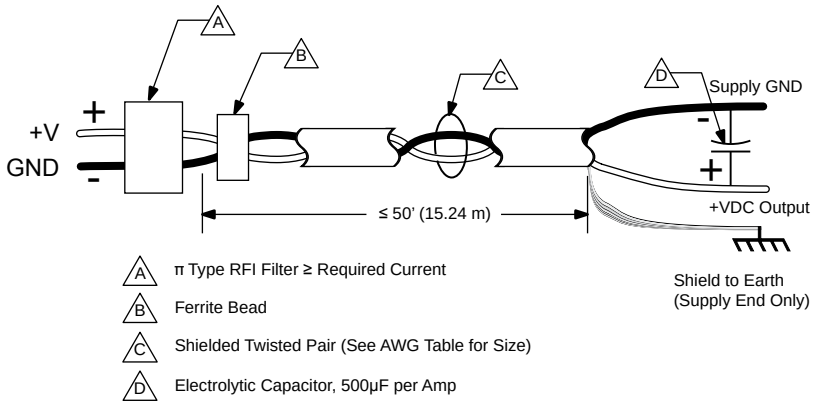

Figure 3.1 DC power supply cabling under 50’ (15.24 m)

3.3.2 50’ (15.24 m) or greater, AC power to full wave bridge

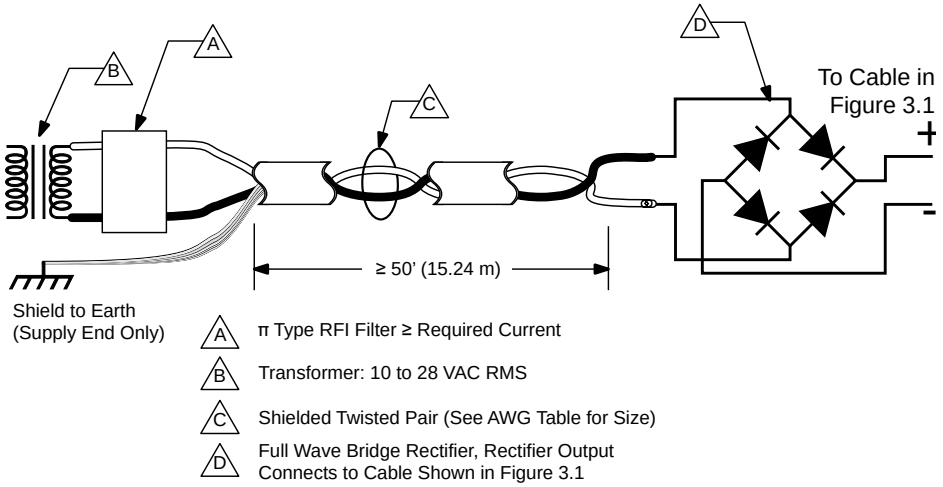

Figure 3.2 **50’ (15.24 m) or greater, AC power to full wave bridge**

3.3.3 50’ (15.24 m) or greater, AC power DC supply

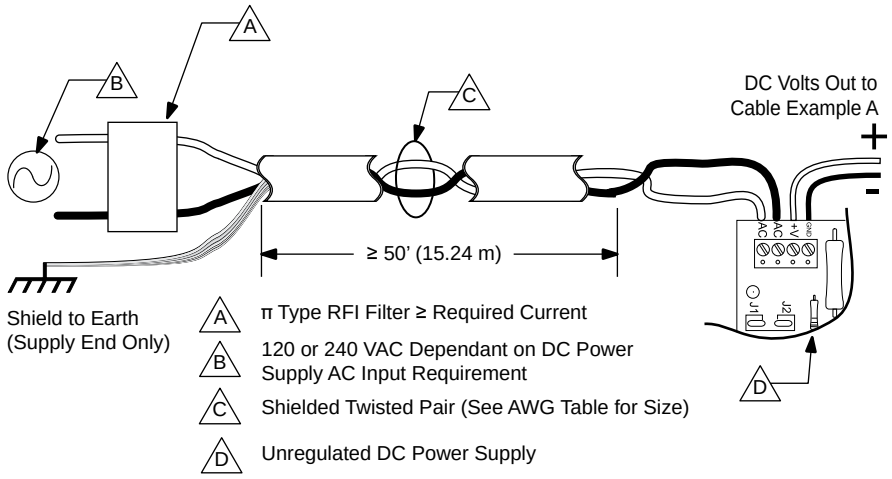

Figure 3.3 **50’ (15.24 m) or greater, AC power to DC supply**

3.3.4 Recommended power supply cable wire gauges

For cable lengths exceeding 50’ (15.2 meters), use the cable con guration shown in Sections 3.3.2 or 3.3.3.

Cable Length: Feet (meters)	10 (3.0)	25 (7.6)	50 (15.2)	75 (22.9)	100 (30.5)
Amps Peak	**Minimum AWG**				
1 Amp Peak	20	20	18	18	18
2 Amps Peak	20	18	16	14	14
3 Amps Peak	18	16	14	12	12
4 Amps Peak	18	16	14	12	12

Table 3.1 Power supply cable AWG recommendations

Detailed speci cations, voltage limits and connectivity information are located in the product detail section corresponding to the MDrive linear actuator model you purchased.

3.4 Switching DC power (DPM75 accessory)

⚠ CAUTION

HOT PLUGGING!

Do not connect or disconnect power, logic, or communications while the device is in a powered state without additional protection.

Remove DC power by powering down at the AC side of the DC power supply.

Failure to follow these instructions may result in damage to system components!

The function of the DPM75 Drive Protection Module is to limit the surge current and voltage to a safe level when DC input power is switched on and off to a motor drive. This provides the added protection necessary for reliable motor drive operation when switching the DC power, instead of the recommended AC power to the DC power supply. The device is designed to protect the motor drive when operating under all load conditions. This device does not protect the motor drive from wiring the power incorrectly.

The unit is capable of being used with 48, 60, and 75 volt rated motor drives. An external jumper selection is available so the user can match the circuit to their particular application. The DPM75 is capable of a steady state operating current of 4 amps.

The DPM75 can be used for any frame size motor drive, when properly con gured. It can also be used for more than one unit provided the current and voltage do not exceed the DPM75's ratings. The maximum DPM75 ratings are 75 volts and 4 amps.

Power requirements and wiring details are available in the product detail section pertaining to the MDrive product purchased.

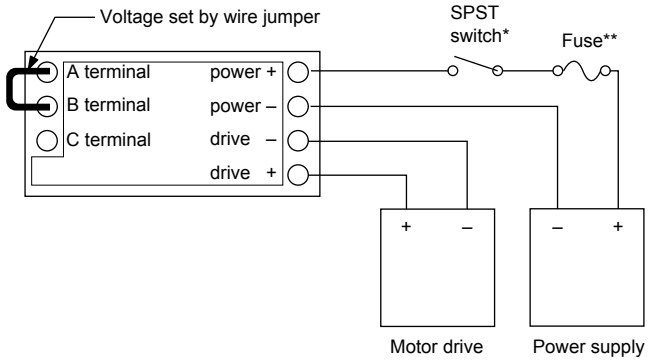

* Do not switch negative side of supply
**Fuse = 6.3 Amp slow blow (recommended: Bussman S505-6.3A or Littelfuse 215006.3). The fuse is optional.

Figure 3.4 DPM75 basic wiring and connection

4 Interfacing AC power

⚠ DANGER

EXPOSED SIGNALS

Hazardous voltage levels may be present if using an open frame power supply to power the product.

Failure to follow these instructions will result in death or serious injury.

⚠ CAUTION

HOT PLUGGING!

Do not connect or disconnect power, logic, or communications while the device is in a powered state.

Remove DC power by powering down at the AC side of the DC power supply.

Failure to follow these instructions may result in damage to system components!

Detailed speci cations, voltage limits, current requirements and connectivity information are located in the product detail section corresponding to the MDrive model you purchased.

4.1 Applicability



This section is only applicable to the MDrive34AC Plus with a 120 or 240 VAC input voltage.

4.2 Interfacing AC voltage

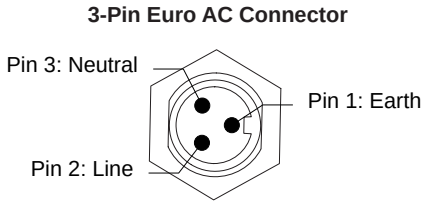

Figure 4.1 Euro AC connector (P3)

Signal	European (IEC) color code	US color code
Earth	Yellow/Green	Green
Line	Brown	Black
Neutral	Blue	White

Table 4.1 AC standard wire colors

4.3 MD-CS20x-000 cordset

The single-end three conductor cordsets are used with the MDrive AC. Measuring 13.0' (4.0m) long, they are available in either straight or right angle termination. IEC color code, oil-resistant yellow PVC jacket, IP68 and NEMA 6P rated.

Straight Termination MD-CS200-000

Right Angle Termination MD-CS201-000

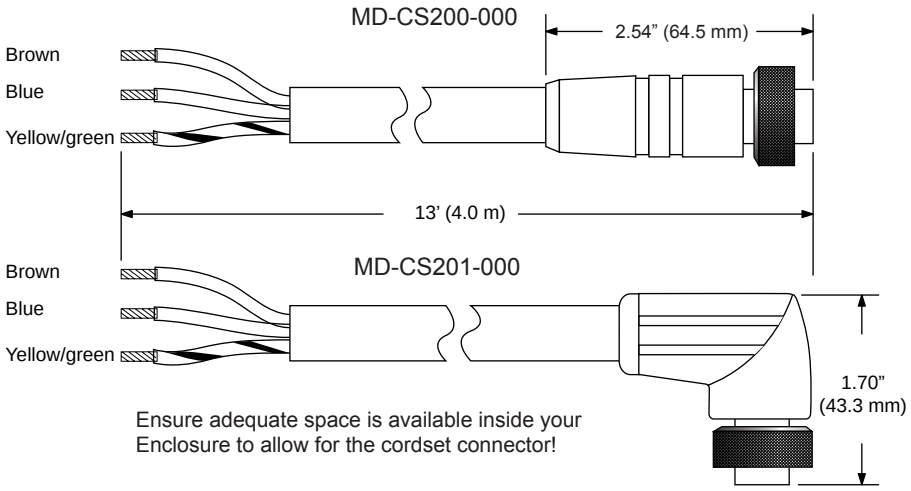

Figure 4.2 MD-CS20x-000

5 Communications and parameter setup

⚠ CAUTION

HOT PLUGGING!

Do not connect or disconnect power, logic, or communications while the device is in a powered state.

Remove DC power by powering down at the AC side of the DC power supply.

Failure to follow these instructions may result in damage to system components!

CONNECTOR OPTIONS

The MDrive microstepping product family has an extensive set of connector options. The purpose of this section is to give a general overview of the SPI communications interface methods and practices.

Please see the section specific to the MDrive product you purchased in the second part of this document for connectors, pin configurations and connectivity options.

5.1 SPI communications interface

The MDrive microstepping integrated motor and driver use the Serial Peripheral Interface (SPI) to configure the setup parameters.

Optionally available are parameter setup and logic interface cable with inline USB to SPI converter for each connector variation. Installation and connection of this covered in the product specific section in Part 2 of this document.

5.1.1 SPI definition

The Serial Peripheral Interface or SPI bus is a synchronous serial data link standard that operates in full duplex mode. Devices communicate in master/slave mode where the master device initiates the data frame. Multiple slave devices are allowed with individual slave select (chip select) lines.

5.1.3 SPI connection methods

⚠ CAUTION

HOT PLUGGING!

Do not connect or disconnect communications while the device is in a powered state.

Failure to follow these instructions may result in damage to system components!

⚠ CAUTION

CHANGING PARAMETERS

Do not attempt to change parameter settings while the device is in operation. Parameters must be set while the device is in a disabled state. The motor cannot be in motion.

Failure to follow these instructions may result in damage to system components!

Typically, the parameters are set on a work bench prior to the installation of the MDrive into a machine. The ideal accessory for this setup method is the IMS USB to SPI communications converter cable (see product speci c section in Part 2 of this document). If a continuous connection to the SPI port is required, see the following gures. Figure 5.1 illustrates a single MDrive on the SPI bus. Figures 5.2 and 5.3 illustrate multi-drop con gurations:

- Independent: MDrives communicating independently with different setup parameters.
- Cooperative: MDrives communicating simultaneously with identical setup parameters.

SPI connection: Single master - single MDrive slave

The single master - single MDrive slave is the most common connection method for the MDrive. It is also the only connection method which will allow use of the IMS SPI Motor Interface utility, which is used to setup and change the motion and current control parameters of the MDrive-14Plus.

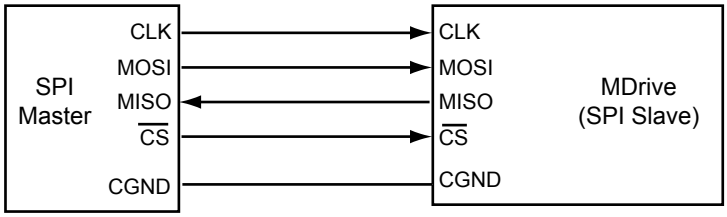

Figure 5.1 Single SPI master - single MDrive slave

Revision R031910

SPI connection: Single master - Independent MDrive slaves

This connection method allows for multiple MDrives in a system to be continually connected to the SPI bus. This method is useful in systems using multiple size devices with different setup parameters.

Using this method the user will have to create a user interface to communicate with the MDrives.

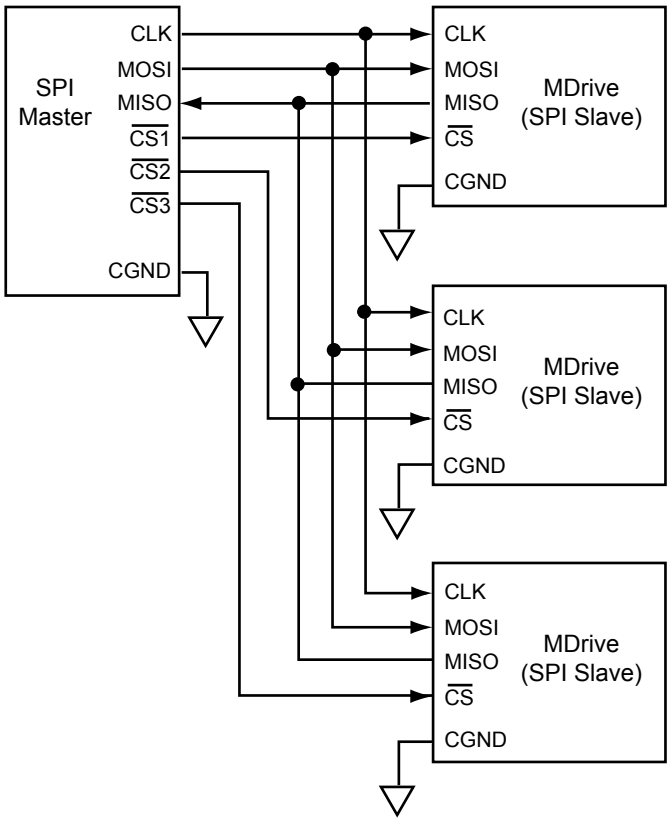

Figure 5.2 Single SPI master - Independent MDrive slaves

SPI connection: Single master - cooperative MDrive slaves

This connection method allows for multiple MDrives in a system to be continually connected to the SPI bus. This method is useful in systems using multiple devices where the setup parameters need to be identical in each device.

Using this method the user will have to create a user interface to communicate with the MDrives.

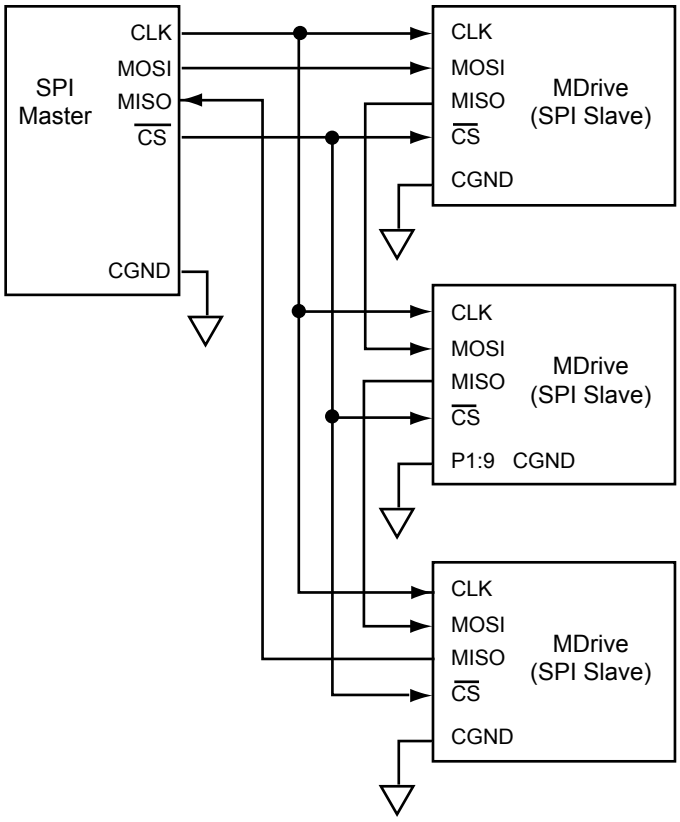

Figure 5.3 Single SPI master - Cooperative MDrive slaves

Logic level shifting circuit

A logic level shifting and conditioning circuit may be required if communicating to the MDrive using a notebook computer with 3.3 VDC parallel port. The schematic in Figure 5.4 shows this circuit.

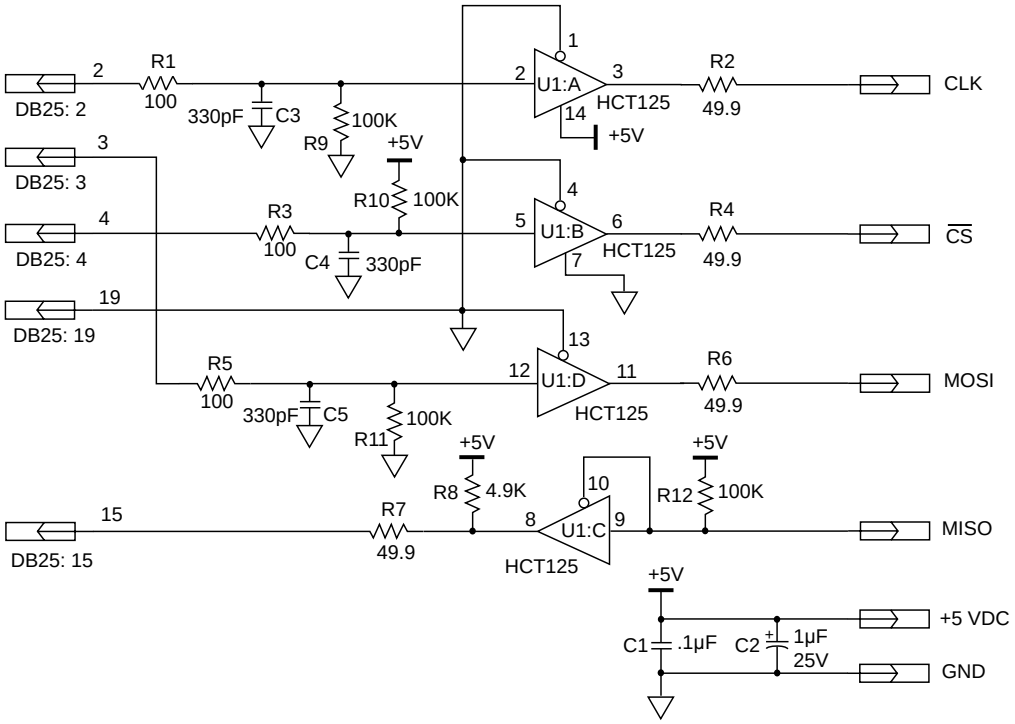

Figure 5.4 Logic level shifting and conditioning circuit

5.1.4 SPI Timing

1) MSb (Most Signi cant bit) rst and MSB (Most Signi cant Byte) rst.
2) 8 bit bytes.
3) 25 kHz SPI Clock (SCK).
4) Data In (MOSI) on rising clock.
5) Data Out (MISO) on falling clock.

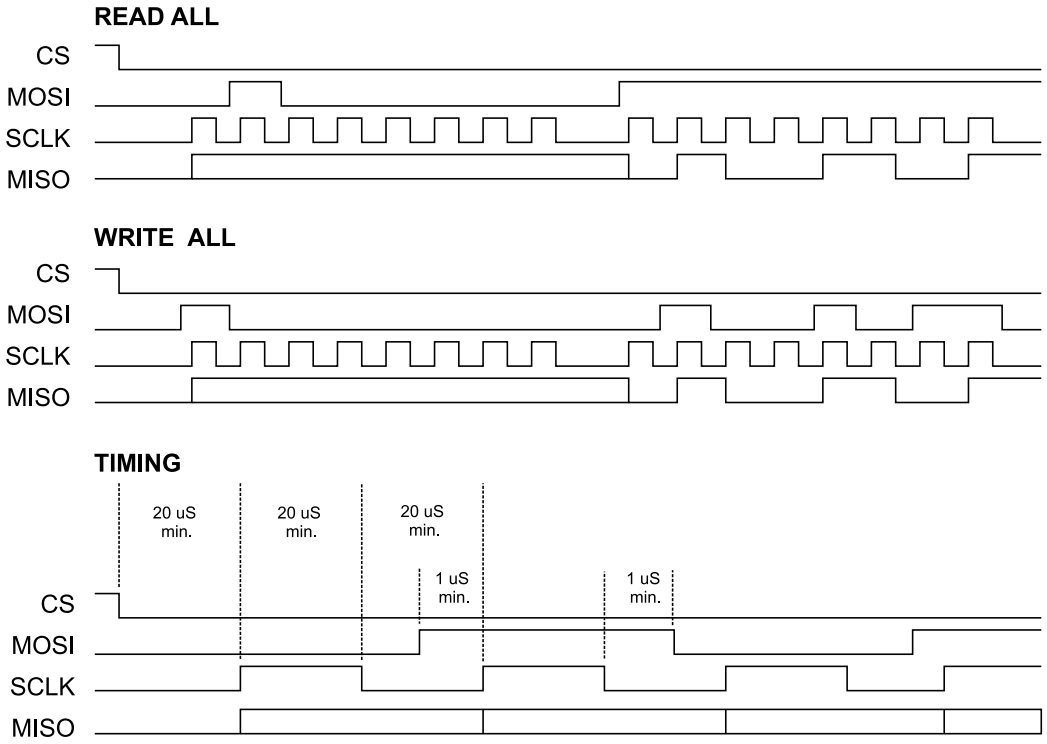

Figure 5.5 SPI Timing

5.1.5 SPI Commands and parameters

CMD/PRM	HEX Default	Dec. Default	Range	Notes
Read All	0x40			Reads the Hex value of all parameters
Write All	0x80			Writes the Hex value to the parameters
DATA READ				
“M”	0x4D			“M” character precedes every data read
Version MSB	0x10		<1-8>.<0-9>	Firmware version MSB
Version LSB	0x01		<0-99>	Firmware version LSB
USR_ID1	0x49	I	Viewable ASCII	Uppercase letter <I>
USR_ID2	0x4D	M	Viewable ASCII	Uppercase letter <M>
USR_ID3	0x53	S	Viewable ASCII	Uppercase letter <S>
MHC	0x05	5%	0 to 100%	Motor Hold Current
MRC	0x19	25%	1 to 100%	Motor Run Current
MSEL	0x00	0	See Table 5.4	Microstep resolution select
DIR_OVRID	0x01	1	0/1	Direction override CCW (0) or CW (1)
HCDT_HI	0x01	500 ms	0 to 65535	Hold Current Delay Time high byte
HCDT_LO	0xF4			Hold Current Delay Time low byte
CLKTYPE	0x00	0 (step/dir)	0-2	0=step/dir, 1=clk up/clk dn, 2=quad
CLKIOF	0x00	0	<0-9>	Input clock filtering
WARNTEMP	0x50	80°C		Warning temperature= overtemp -5°C
ENACT	0x01	1=Active	<0/1>	Enable Active 0=low, 1=high
FAULT	0	0x00	—	See fault error code table
DATA WRITE				
Version MSB	0x10		<1-8>.<0-9>	Firmware version MSB
Version LSB	0x01		<0-99>	Firmware version LSB
USR_ID1	0x49	I	Viewable ASCII	Uppercase letter <I>
USR_ID2	0x4D	M	Viewable ASCII	Uppercase letter <M>
USR_ID3	0x53	S	Viewable ASCII	Uppercase letter <S>
MHC	0x05	5%	0 to 100%	Motor Hold Current
MRC	0x19	25%	1 to 100%	Motor Run Current
MSEL	0x00	0	See Table 5.4	Microstep resolution select
DIR_OVRID	0x01	1	0/1	Direction override CCW (0) or CW (1)
HCDT_HI	0x01	500 ms	0 to 65535	Hold Current Delay Time high byte
HCDT_LO	0xF4			Hold Current Delay Time low byte
CLKTYPE	0x00	0 (step/dir)	0-2	0=step/dir, 1=clk up/clk dn, 2=quad
CLKIOF	0x00	0	<0-9>	Input clock filtering
WARNTEMP	0x50	80°C		Warning temperature= overtemp -5°C
ENACT	0x01	1=Active	<0/1>	Enable Active 0=low, 1=high
CKSUM		33		Checksum

Table 5.1 SPI Commands and Parameters

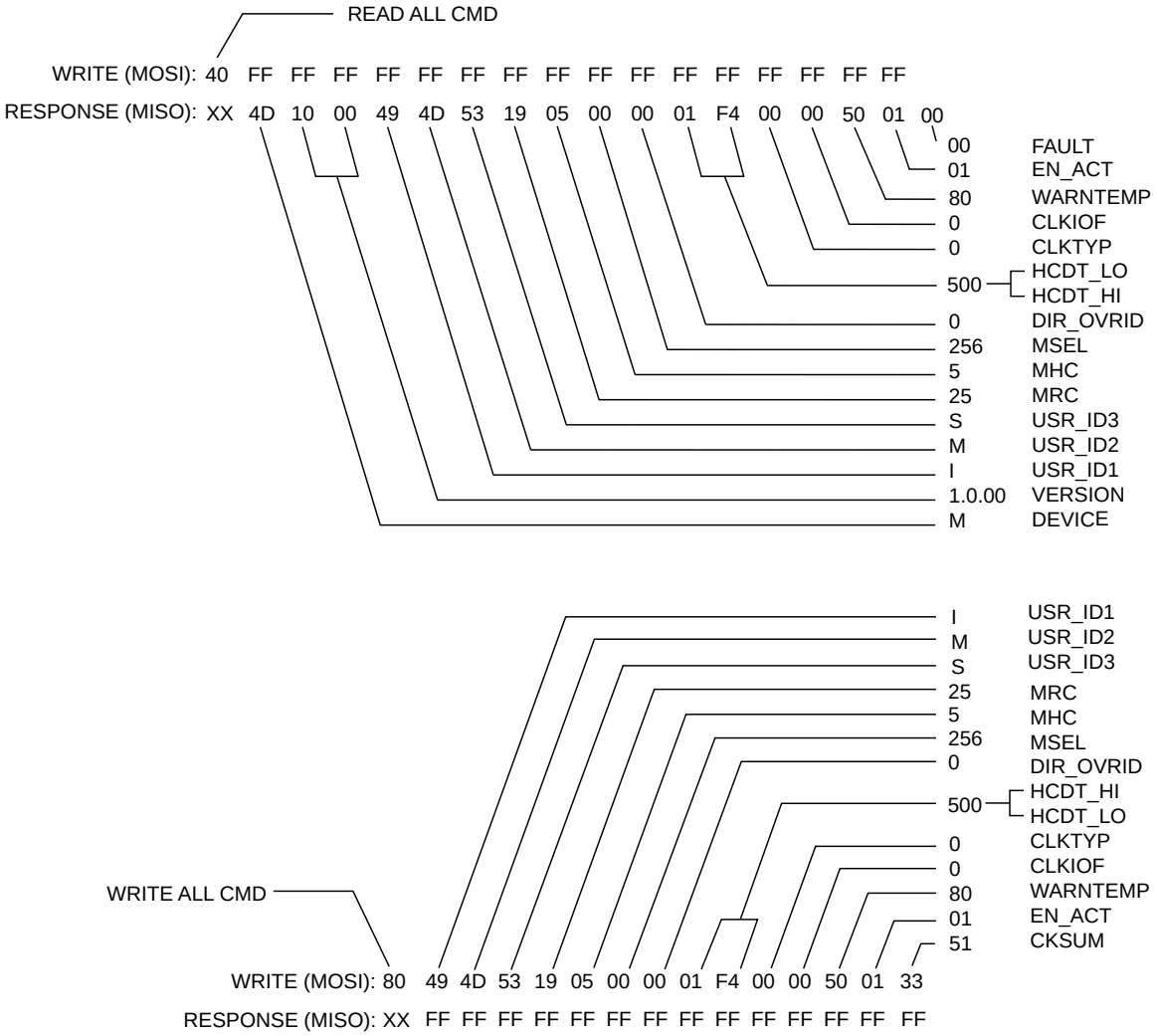

CHECKSUM CALCULATION

80+49+4D+53+19+05+00+00+01+F4+00+00+50+01=CD

BINARY = 1100 1101

1'S COMPLEMENT = 0011 0010

2'S COMPLEMENT = 0011 0011

DEC = 51

HEX = 33

Figure 5.6 SPI Commands and parameters

5.1.6 SPI Communications sequence

See Timing Diagram and Byte Order gures.

Read

1) Send READ ALL Command 0x40 down MOSI to MDrive Microstepping followed by FF (15 Bytes).
2) Receive Parameter settings from MISO MSB First (M-Device) and ending with LSB (Fault).

Write

3) Send WRITE ALL Command (0x80) down MOSI followed by Parameter Bytes beginning with MSB (MRC) and ending with the LSB (Checksum of all parameter Bytes).
4) Response from MISO will be FF (10) Bytes.

5.2 SPI Motor Interface

SPI Motor Interface is the setup and con guration utility developed to provide the customer with a Graphical User Interface (GUI) to easily con gure IMS products that communicate over the SPI bus.

5.2.1 System Requirements

- PC or notebook running Windows XP™ service pack 2 or greater.

5.2.2 Installation

1) Download the installation package from http://www.imshome.com/software_interfaces.html
2) Browse to the download location on your PC hard-drive and extract the les from the zip le
3) Double-click setup.exe.
4) Follow the installation prompts to complete the installation.

5.2.3 Connect to the SPI port

To connect to the SPI port on the MDrive14Plus:

1) Apply power to the MDrive
2) Open the SPI Motor Interface program
3) Select the PC COM port that the MDrive is connected to (see Figure 5.7) See Appendix A: Connectivity for details on determining the COM port.
4) If communications is established, the setup dialog will display (Figure 5.8)

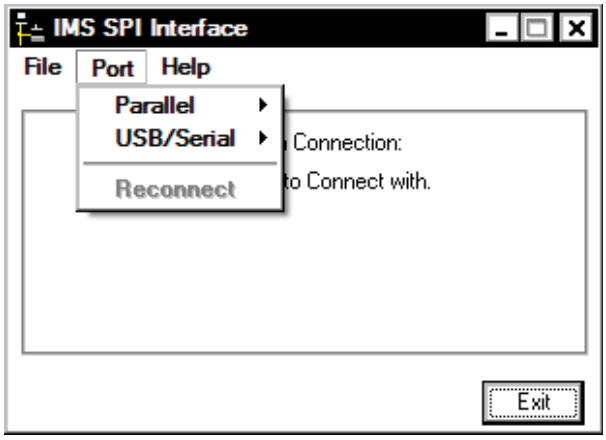

Figure 5.7 SPI Motor Interface startup dialog

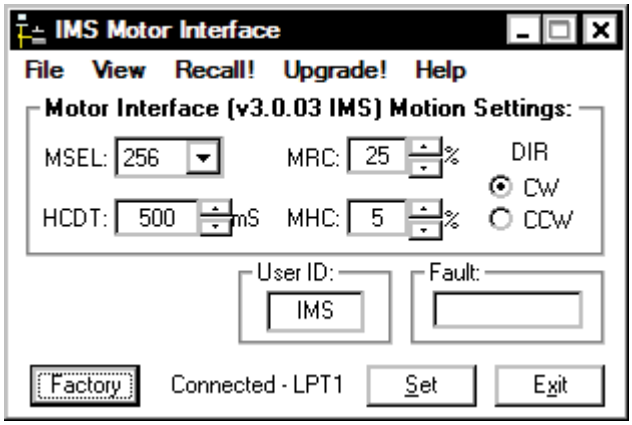

Figure 5.8 SPI Motor Interface parameter setup dialog

5.2.4 Setup Parameters

Parameter	Default	Range	Notes
MHC	5%	0 to 100%	Motor Hold Current
MRC	25%	1 to 100%	Motor Run Current
MSEL	256	See Table 5.4	Microstep resolution
ENACT	High	High/Low	Enable active state
HCDT	500 ms	0 to 65000	Hold Current Delay Time in milliseconds
DIR	CW	CCW/CW	Direction override CCW or CW
CLK TYPE	Step/Dir	See Specifications	Input clock type
CLK IOF	200ns (250 MHz)	50 ns to 12.9 µs (10 MHz to 38.8 kHz)	Input clock filter
USER ID	IMS	Viewable ASCII	User identification code

Table 5.2 MDrive setup parameters

5.2.5 Color coded parameter values

The SPI Motor Interface displays the parameter values using a pre-de ned system of color codes to identify the status of the parameter.

1) Black: the parameter settings currently stored in the device NVM will display as black.
2) Blue: Blue text indicates a changed parameter setting that has not yet been written to the device.
3) Red: Red text indicates an out-of-range value which cannot be written to the device. When an out-of-range parameter is entered into a eld, the "set" button will disable, preventing the value to be written to NVM.

To view the valid parameter range, hover the mouse pointer over the eld. The valid range will display in a tool tip.

5.2.7 Motor settings con guration screen

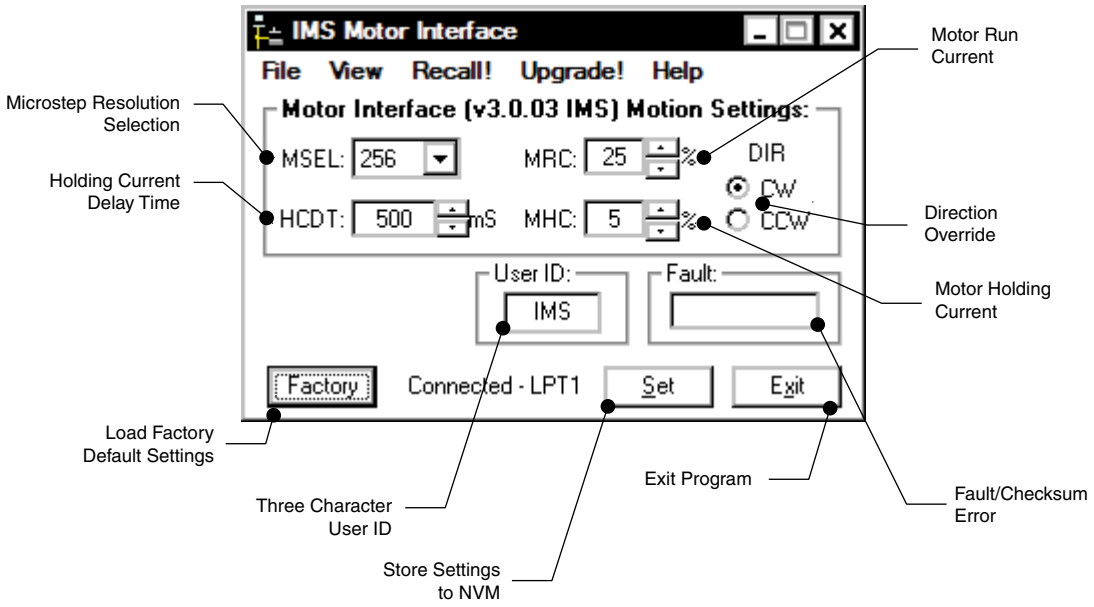

Figure 5.9: SPI Motor Interface motion settings screen

The IMS SPI Motor Interface Software opens by default to the Motion Settings Screen shown on the left.

1) There are six basic parameters that may be set here:
2) MSEL: Microstep Resolution Select.
3) HCDT: Holding Current Delay Time.
4) MRC: Motor Run Current
5) Motor Holding Current
6) User ID: 3-character ID
7) Direction Override: Allows the user to set the CW/CCW direction of the motor in relation to the Direction Input from the SPI Motor Interface.

MSEL (Microstep Resolution Selection)

The MDrive Microstepping features 20 microstep resolutions. This setting speci es the number of microsteps per step the motor will move.

The MDrive uses a 200 step (1.8°) stepping motor which at the highest (default) resolution of 256 will yield 51,200 steps per revolution of the motor shaft.

See Table 5.3 for available Microstep Resolution.

Binary		Decimal	
microsteps/step	steps/revolution	microsteps/step	steps/revolution
1	200	5	1000
2	400	10	2000
4	800	25	5000
8	1600	50	10000
16	3200	100	20000
32	6400	125	25000
64	12800	200	40000
128	25600	250	50000
256	52100		
Additional resolution settings			
180	36000 (0.01°/µstep)		
108	21600 (1 arc-min/µstep)		
127	25400 (0.001 mm/µstep)		

Table 5.3 Microstep resolution settings

HCDT (Hold Current Delay Time) The HCDT Motor Hold Current Delay sets time in milliseconds for the Run Current to switch to Hold Current when motion is complete. When motion is complete, the MDrive Microstepping will reduce the current in the windings of the motor to the percentage speci ed by MHC when the speci ed time elapses.

MRC (Motor Run Current) The MRC Motor Run Current parameter sets the motor run current to a percentage of the full output current of the MDrive driver section.

MHC (Motor Hold Current) The MHC parameter sets the motor holding current as a percentage of the full output current of the driver. If the hold current is set to 0, the output circuitry of the driver section will disable when the hold current setting becomes active. The hold current setting becomes active the amount of time speci ed by the HCDT setting following the last clock pulse.

DIR (Motor Direction) The DIR Motor Direction parameter changes the motor direction relative to the direction input signal, adapting the direction of the MDrive to operate as your system expects.

User ID The User ID is a three character (viewable ASCII) identi er which can be assigned by the user. Default is IMS.

IMS SPI Motor Interface Button Functions

The following appear on all of the IMS SPI Motor Interface screens, but will only be documented here.

Factory

Clicking the Factory button will load the MDrive Microstepping unit's factory default settings into the IMS SPI Motor Interface.

Connected/Disconnected Indicator

Displays the connected/disconnected state of the software , and if connected, the port connected on.

Set

Set writes the new settings to the MDrive . Un-set settings will display as blue text in the setting elds. Once set they will be in black text. Setting the Parameters will also clear most Fault Conditions.

Exit

Disconnects and opens the Initialization dialog.

5.2.8 I/O settings con guration screen

The I/O Settings screen may be accessed by clicking View > IO Settings on the menu bar. This screen is used to con gure the Input Clock type, the ltering and the Active High/Low State of the Enable Input.

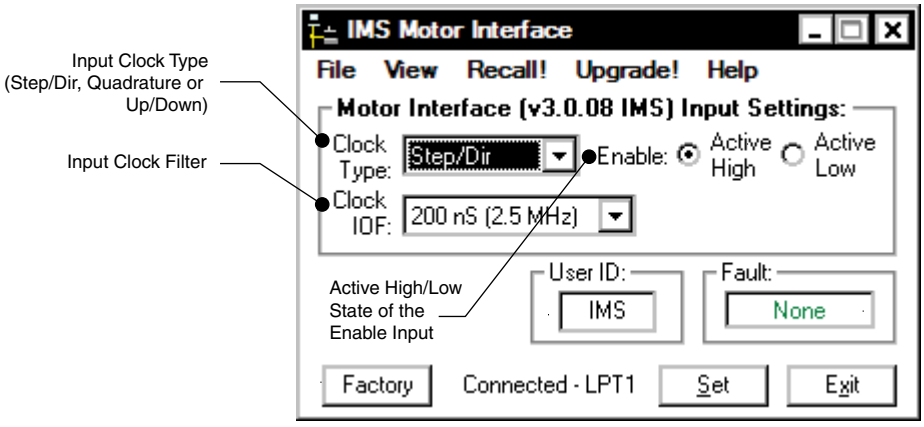

Figure 5.10: SPI Motor Interface I/O settings screen

Input Clock Type

The Input Clock Type translates the speci ed pulse source that the motor will use as a reference for establishing stepping resolution based on the frequency.

The three clock types supported are:

1) Step/Direction
2) Quadrature
3) Up/Down
4) CW/CCW - Note that CW/CCW is functionally the same as Up/Down.

Input Clock Filter

The clock inputs may also be ltered using the Clock IOF pull down of the IMS SPI Motor Interface. The lter range is from 50 nS (10 MHz) to 12.9 µSec. (38.8 kHz). Table 5.5 shows the lter settings.

Minimum pulse width	Cut-off frequency
50 ns	10 MHz
150 ns	3.3 MHz
200 ns	2.5 MHz
300 ns	1.67 MHz
500 ns	1.0 MHz
900 ns	555 kHz
1.7 µs	295.1 kHz
3.3 µs	151 kHz
5.5 µs	79.6 kHz
12.9 µs	38.8 kHz

Table 5.4 Input clock lter settings

Enable Active High/Low

The parameter sets the Enable Input to be Active when High (Default, Disconnected) or Active when Low.

5.2.9 IMS part number/serial number screen

The IMS Part Number and Serial Number screen is accessed by clicking “View > Part and Serial Numbers”.

This screen is read-only and will display the part and serial number, as well as the fault code if existing. IMS may require this information if calling the factory for support.

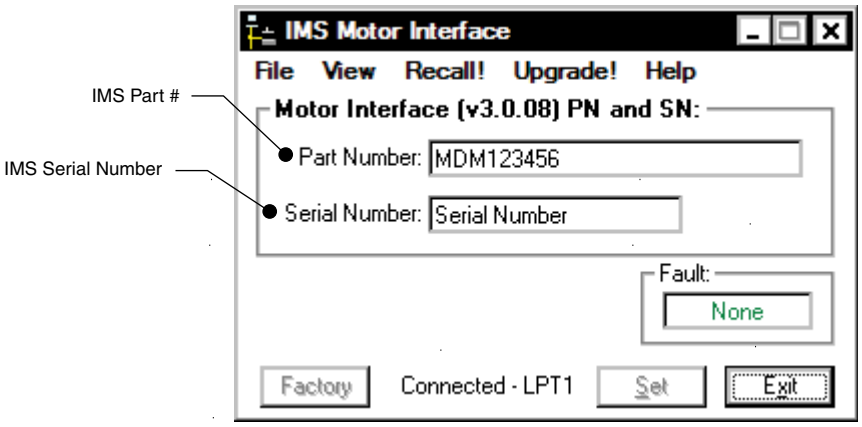

Figure 5.11: SPI Motor Interface part number serial number screen

5.2.10 Fault codes

All of the IMS SPI Motor Interface Screens have the Fault eld visible. This read-only eld will display a 2 character error code to indicate the type of fault. The table below shows the error codes.

Binary case	Error code	Description	Action	To clear
—	None	No fault	—	—
4	CS	SPI checksum error	Error displayed	Write to device
8	SC/CS	SPI checksum error/sector changing	Error displayed	Write to device
16	DFLT	Defaults checksum error	Error displayed	Write to device
32	DATA	Settings checksum error	Error displayed	Write to device

Table 5.5 Fault error codes

5.2.10 Upgrading the rmware in the MDrive Microstepping

The IMS SPI Upgrader

New rmware releases are posted to the IMS web site at http://www.imshome.com.

The IMS SPI Motor Interface is required to upgrade your MDrive Microstepping product. To launch the Upgrader, click “Upgrade!” on the IMS SPI Motor Interface menu.

The Upgrader screen has 4 read-only text elds that will display the necessary info about your MDrive Microstepping.

Previous Version: this is the version of the rmware currently on your MDrive Microstepping.

Serial Number: the serial number of your unit.

Upgrade Version: will display the version number of the rmware being installed.

Messages: the messages text area will display step by step instructions through the upgrade process.

Upgrade Instructions

Below are listed the upgrade instructions as they will appear in the message box of the IMS SPI Upgrader. Note that some steps are not shown as they are accomplished internally, or are not relevant to the model IMS product you are updating. The only steps shown are those requiring user action.

Welcome Message: Welcome to the Motor Interface UPGRADER! Click NEXT to continue.

Step 2: Select Upgrade File

When this loads, an explorer dialog will open asking you to browse for the rmware upgrade le. This le will have the extension *.ims.

Step 3: Connect SPI Cable

Step 4: Power up or Cycle Power to the MDrive

Step 6: Press Upgrade Button

Progress bar will show upgrade progress in blue, Message box will read “Resetting Motor Interface”

Step 8: Press DONE, then select Port/Reconnect.

This page is intentionally left blank

5 Interfacing logic inputs

⚠ CAUTION

ELECTRICAL OVERSTRESS

The universal logic inputs are tolerant to +24 VDC. The differential input version inputs are TTL level and only tolerant to +5 VDC:

Do not exceed +5 VDC on the differential inputs.

Failure to follow these instructions can result in equipment damage.

⚠ CAUTION

HOT PLUGGING!

Do not connect or disconnect power, logic, or communications while the device is in a powered state.

Remove DC power by powering down at the AC side of the DC power supply.

Failure to follow these instructions may result in damage to system components!

⚠ CAUTION

EMI and RFI

These recommendations will provide optimal protection against EMI and RFI. The actual cable type, wire gauge, shield type and filtering devices used are dependent on the customer's application and system.

Logic level cables must not run parallel to power cables. Power cables will introduce noise into the logic level cables and make your system unreliable.

Logic level cables must be shielded to reduce the chance of EMI induced noise. The shield needs to be grounded at the signal source to earth. The other end of the shield must not be tied to anything, but allowed to float. This allows the shield to act as a drain.

Failure to follow these instructions may result in damage to system components!



CONNECTOR OPTIONS

The MDrive microstepping product family has an extensive set of connector options. The purpose of this section is to give a general overview of the I/O interface methods and practices.

Please see the section specific to the MDrive product you purchased in the second part of this document for connectors, pin configurations and connectivity options.

6.1 Logic inputs (universal input version)

The MDrive has three optically isolated inputs which are located on connector P1. These inputs are isolated to minimize or eliminate electrical noise coupled onto the drive control signals. Each input is internally pulled-up to the level of the optocoupler supply and may be connected to sinking or +5 to +24 VDC sourcing outputs on a controller or PLC. These inputs are:

1) Step Clock (SCLK)
2) Direction (DIR)
3) Enable (EN)

Of these inputs only step clock and direction are required to operate the MDrive Microstepping.

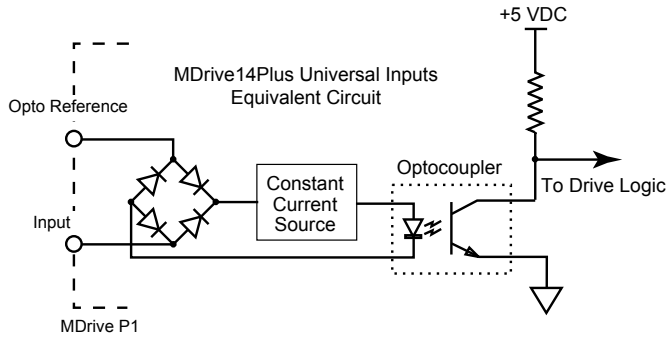

Figure 6.1 Universal optically isolated input equivalent circuit

6.1.1 Logic inputs

Function	Description
OPTO	Optocoupler reference input
SCLK	Step Clock input
EN	The Enable Input can be used to enable or disable the driver output circuitry.
DIR	The direction Input controls the clockwise/ counterclockwise direction of the motor. It may be configured as sinking or sourcing depending on the state of the Optocoupler Reference.

Table 6.1 Universal logic inputs

6.1.2 Optically isolated input description

P1:4 — Step Clock

The step clock input is where the motion clock from your control circuitry will be connected. The motor will advance one microstep in the plus or minus direction (based upon the state of the direction input) on the rising edge of each clock pulse. The size of this increment or decrement will depend on the microstep setting

.

P1:6 — Direction

The direction input controls the CW/CCW direction of the motor. The input may be con gured as sinking or sourcing based upon the state of the Optocoupler Reference. The CW/CCW rotation, based upon the state of the input may be set using the IMS Motor Interface software included with the MDrive14Plus Microstepping.

Clock Input Timing

STEP/DIR interface mode

The motor angle step with the rising edge of the pulse signal, the direction of rotation is controlled by the DIR signal.

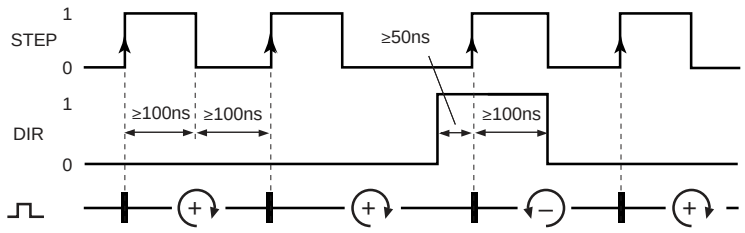

Figure 6.1 Step /direction signal timing

CW/CCW interface mode

The motor angle step with the rising edge of the pulse signal, the direction of rotation is controlled by the input receiving pulses.

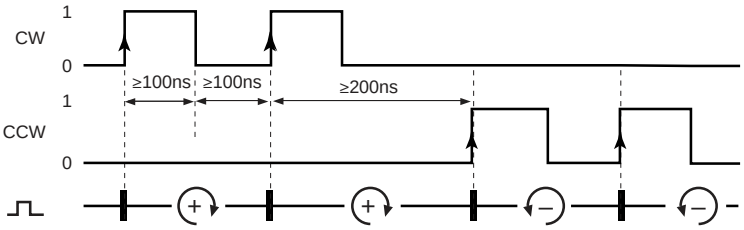

Figure 6.2 CW/CCW signal timing

Revision R031910

A/B (quadrature) interface mode

In A/B interface mode, quadrature signals are supplied as reference values.

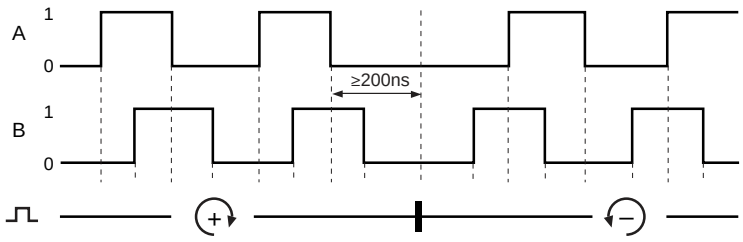

Figure 6.3 A/B quadrature signal timong

P1:5 — Enable Input

This input can be used to enable or disable the driver output circuitry. Leaving the enable switch open, Disconnected) for sinking or sourcing con guration, the driver outputs will be enabled and the step clock pulses will cause the motor to advance. When this input switch is closed (active signal) in both sinking and sourcing con gurations, the driver output circuitry will be disabled. Please note that the internal sine/cosine position generator will continue to increment or decrement as long as step clock pluses are being received by the device.

6.1.3 Optocoupler reference input

The optocoupler reference sets the reference state, sinking or sourcing, for the universal isolated logic inputs.

If a +5 to +24 VDC power source is connected to the reference, the inputs will be sinking-type inputs.

If the reference is connected to ground, the inputs will be sourced by a +5 to +24 VDC signal. Section 6.3 details both connection methods.

6.1.4 Interfacing the isolated logic inputs

NPN Sinking inputs

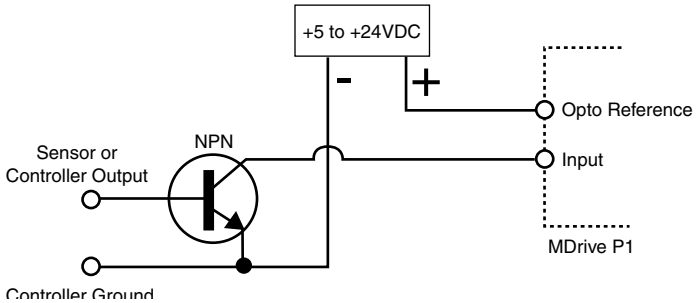

Figure 6.4 Open collector sinking input

PNP sourcing inputs

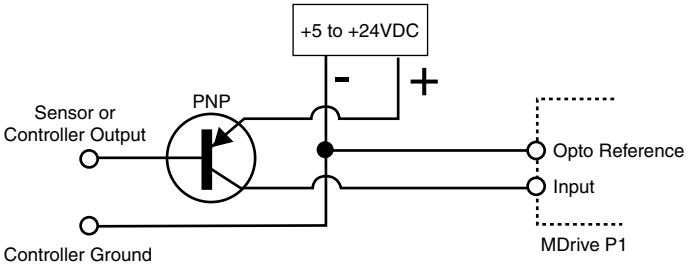

Figure 6.5 Open collector sourcing input

Sinking inputs

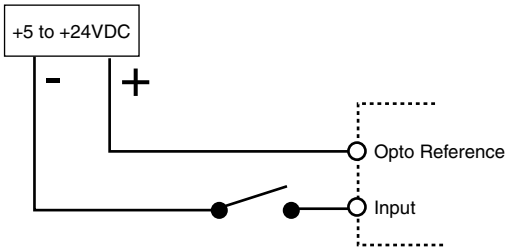

Figure 6.6 Switch interface sinking input

Sourcing inputs

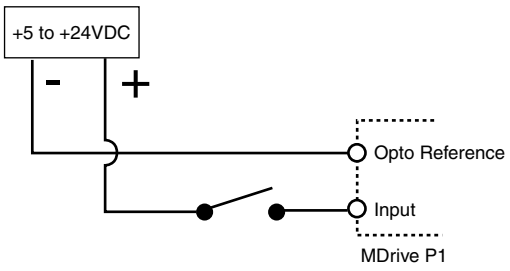

Figure 6.7 Switch interface sourcing input

Revision R031910

6.2 Logic inputs (differential input version)

> **⚠ CAUTION**
>
> **ELECTRICAL OVERSTRESS**
>
> The universal logic inputs are tolerant to +24 VDC. The differential input version inputs are TTL level and only tolerant to +5 VDC:
>
> Do not exceed +5 VDC on the differential inputs.
>
> **Failure to follow these instructions can result in equipment damage.**

6.2.1 Logic inputs

Function	Description
CW+	Clockwise + input
CW-	Clockwise - input
CCW+	Counter-clockwise + input.
CCW-	Counter-clockwise - input.

Table 6.2 Differential logic inputs

6.2.2 Connection and interface

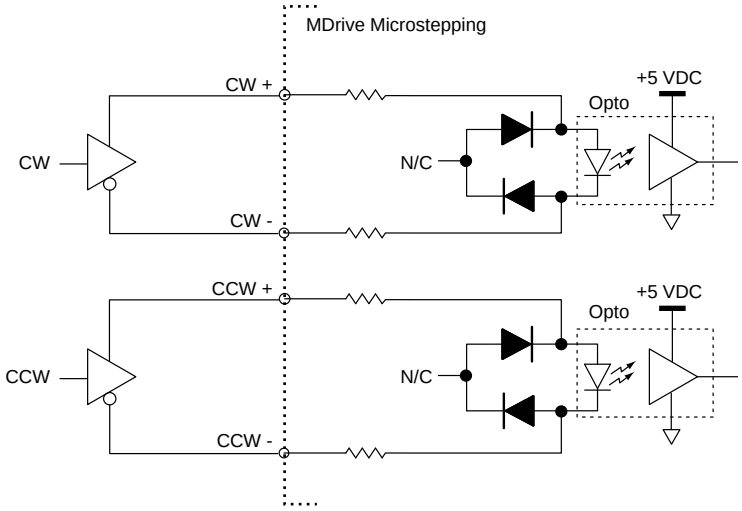

Figure 6.8 Differential line-driven input interface

7 Minimum connection requirements

⚠ DANGER

EXPOSED SIGNALS

Hazardous voltage levels may be present if using an open frame power supply to power the optocouplers and motor power.

Failure to follow these instructions will result in death or serious injury.

⚠ CAUTION

HOT PLUGGING!

Do not connect or disconnect DC power, logic or communications while the device is in a powered state.

Failure to follow these instructions can result in equipment damage.

⚠ CAUTION

EMI and RFI

These recommendations will provide optimal protection against EMI and RFI. The actual cable type, wire gauge, shield type and filtering devices used are dependent on the customer's application and system.

Logic level cables must not run parallel to power cables. Power cables will introduce noise into the logic level cables and make your system unreliable.

Logic level cables must be shielded to reduce the chance of EMI induced noise. The shield needs to be grounded at the signal source to earth. The other end of the shield must not be tied to anything, but allowed to float. This allows the shield to act as a drain.

Failure to follow these instructions may result in damage to system components!



CONNECTOR OPTIONS

The MDrive microstepping products family has an extensive set of connector options. The purpose of this section is to give a general overview of the I/O interface methods and practices.

Please see the section specific to the MDrive product you purchased in the second part of this document for connectors, pin configurations and connectivity options.

7.1 Minimum connection requirements

The diagrams below illustrates the minimum connections required to operate the MDrive microstepping integrated motor and driver.

These connections are:

- +V Motor power
- Power ground
- Optocoupler reference
- Step clock
- CW/CCW direction

Connecting SPI communications is not required as the device will operate using the factory default settings in full step mode at 25% run current.

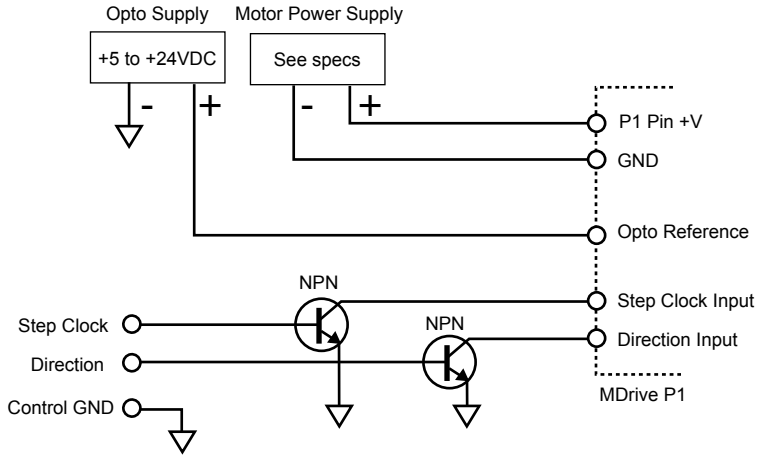

Figure 6.1 Minimum connections, open-collector sinking con guration

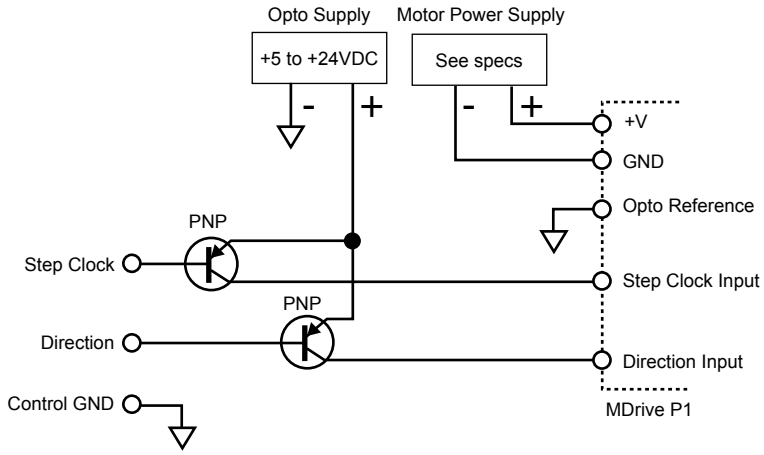

Figure 6.2 Minimum connections, open-collector sourcing con guration

MDrive® Microstepping

Part 2: Detailed Speci cations and Connectivity Information

1. MDrive 14
2. MDrive 17
3. MDrive 23
4. MDrive 34
5. MDrive 34AC

This page intentionally left blank

MDrive® 14
Microstepping

CE RoHS

1. Introduction
2. Speci cations
3. Mounting Recommendations
4. Interface and Connectivity

This page intentionally left blank

Table of Contents

1 Introduction 1-1
- 1.1 MDrive 14 Microstepping unit overview 1-1
- 1.2 Product identi cation 1-2
- 1.3 Documentation reference 1-2
- 1.4 Product software 1-2

2 Speci cations 2-1
- 2.1 Mechanical speci cations 2-1
- 2.2 General speci cations 2-2
  - 2.2.1 Electrical speci cations 2-2
  - 2.2.2 Logic speci cations 2-2
  - 2.2.3 Communications speci cations 2-2
  - 2.2.4 Thermal speci cations 2-2
  - 2.2.5 Motion speci cations 2-3
  - 2.2.8 Motor speci cations 2-3
  - 2.2.9 Performance curves 2-3
- 2.3 Connectivity speci cations/pin assignments 2-5
  - 2.3.1 P1 — Power, communications and logic (universal inputs) 2-5
  - 2.3.1 P1 — Power, communications and logic (differential inputs) 2-6
- 2.4 Connectivity 2-7
  - 2.3.2 P2 —- Internal magnetic encoder (differential) 2-7
- 2.5 Options 2-8

3 Mounting and connection recommendations 3-1
- 3.1 Mounting 3-2
- 3.2 Layout and interface guidelines 3-3
  - 3.2.1 Recommended Wiring 3-3
  - 4.2.2 Securing power and logic leads 3-3

4 Connection and interface 4-1
- 4.1 Interfacing communications 4-1
  - 4.1.1 P1 — 12--pin wire crimp connector 4-2
- 4.3 Interfacing DC power 4-3
  - 4.3.1 Recommended IMS power supplies 4-3
  - 4.3.2 Recommended wire gauge 4-4
  - 4.3.3 P1 — 12-pin locking wire crimp interface 4-4
  - 4.3.4 Power Interface using Drive Protection Module DPM75 ..... 4.4
- 4.4 Interfacing Logic (universal input) 4-5
  - 4.4.1 P1 — 12-pin locking wire crimp 4-5
- 4.5 Interfacing Logic (differential inputs) 4-6
  - 4.5.3 P1 — 12-pin locking wire crimp 4-6
- 4.6 Optional encoder interface 4-7
- 4.7 Connectivity accessory details 4-8
  - 4.7.1 USB to SPI communications converter cables 4-8
  - 4.7.2 PD12B-3400-FL3 prototype development cable 4-8
  - 4.7.3 Mating connector kits 4-8

Revision R031910

List of Figures

Figure 1.1 Standard product options 1-2
Figure 2.1 External shaft mechanical speci cations 2-1
Figure 2.2 Performance curves - single length motor 2-3
Figure 2.3 erformance curves - triple length motor 2-4
Figure 3.1 MDrive 14 Microstepping mounting and drill pattern 3-2
Figure 3.2 Secure leads 3-4
Figure 4.1 DPM75 Drive Protection Module 4-4
Figure 4.2 MD-CC305-001 USB to SPI converter cable 4-8
Figure 4.3 Prototype development cable PD12B-1435-FL3 4-8

List of Tables

Table 2.1 Electrical speci cations 2-2
Table 2.2 I/O speci cations 2-2
Table 2.3 Communications speci cations 2-2
Table 2.4 Thermal speci cations 2-2
Table 2.5 Motion speci cations 2-3
Table 2.8 Microstepping motor speci cations 2-3
Table 2.9 P1 — Power, communications and logic, 12-oin locking wire ... crimp 2-5
Table 2.10 P1 — Power, communications and logic, 12-oin locking wire ... crimp 2-6
Table 2.11 P2 — Internal encoder option 2-7
Table 4.1 Communications connections, P1 - 12-pin wire crimp 4-2
Table 4.2 Recommended power supply characteristics 4-3
Table 4.3 Recommended power supply wire gauge 4-3
Table 4.4 Power and ground connections, 12-pin locking wire crimp ... 4-4
Table 4.5 Universal input connections, 12-pin locking wire crimp 4-5
Table 4.6 Differential input connections, 12-pin locking wire crimp 4-6
Table 4.7 P2 - Optional encoder interface 4-7

Revision R031910

Page intentionally left blank

1 Introduction

The **MDrive® 14 Microstepping** high torque integrated motor and step and direction driver is ideal for designers who want the simplicity of a motor with on-board electronics. The integrated electronics of the MDrive 14 eliminate the need to run motor cabling through the machine, reducing the potential for problems due to electrical noise.

1.1 MDrive 14 Microstepping unit overview

The unsurpassed smoothness and performance delivered by the MDrive 14 Microstepping are achieved through IMS's advanced 2nd generation current control. By applying innovative techniques to control current ow through the motor, resonance is signi cantly dampened over the entire speed range and audible noise is reduced.

The MDrive 14 accepts a broad input voltage range from +12 to +48 VDC, delivering enhanced performance and speed. Oversized input capacitors are used to minimize power line surges, reducing problems that can occur with long runs and multiple drive systems. An extended operating range of –40° to +85°C provides long life, trouble free service in demanding environments.

The MDrive 14 uses a NEMA 14 frame size high torque brushless step motor integrated with a microstepping driver, and accepts up to 20 resolution settings from full to 256 microsteps per full step, including: degrees, metric and arc minutes. These settings may be changed on-the- y or downloaded and stored in nonvolatile memory with the use of a simple GUI which is provided. This eliminates the need for external switches or resistors. Parameters are changed via an SPI port.

The versatile MDrive 14 Microstepping is available in multiple con gurations to t various system needs. Rotary motor versions come in 2 lengths and may include an encoder, control knob or planetary gearbox. Long life Acme screw linear actuators** are also available. Interface connections are accomplished using locking wire crimp connectors.

MDrive connectivity has never been easier with options ranging from all-inclusive QuickStart Kits to individual interfacing cables and mating connector kits to build your own cables. See pg 4.

The MDrive 14 is a compact, powerful and cost effective motion control solution that will reduce system cost, design and assembly time for a large range of brushless step motor applications.

Revision R031910

1.2 Product identi cation

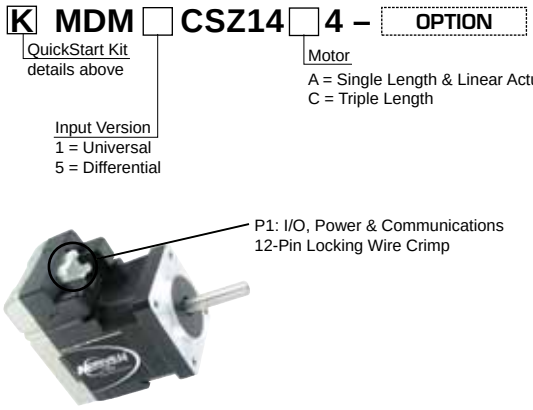

Example #1: Part Number **MDM1CSZ14A4** is an MDrive14Plus Microstepping with Universal Input, 12-pin pluggable locking wire crimp connector for I/O, power and communications interface, and NEMA 14 single length motor.

OPTIONS

External Encoder **–E**

Refer to external encoder table above for line counts and part numbers.

Example: **MDM1CSZ14A4–EHL** adds an external 500-line count differential optical encoder with index mark to example #1.

Internal Encoder **–E**

Refer to internal encoder table above for line counts and part numbers.

Example: **MDM1CSZ14A4–ECM** adds an internal 250-line count differential magnetic encoder with index mark to example #1.

Control Knob **–N**

Example: **MDM1CSZ14A4–N a**dds a rear control knob for manual positioning to example #1.

Planetary Gearbox **–G – F**

Refer to gearbox page for complete table of ratios and part numbers.

Optional NEMA Flange

Example: **MDM1CSZ14A4–G1A2** adds a 1-stage planetary gearbox with 5.18:1 ratio to example #1. Add –F for optional NEMA flange.

Figure 1.1 Standard product options

1.3 Documentation reference

The following User's manuals are available for the MDrive 14 Microstepping:

- Product manual, describes the technical data, installation, con guration and programming of the product.
- Quick Reference, describes the basic wiring, connection and use of this product. The quick reference is shipped in printed form with the product.

This documentation is also available for download from the IMS web site at http://www.imshome.com

1.4 Product software

The MDrive 14 Microstepping integrated motor and driver is con gured using the SPI motor interface graphical user interface. This free software may be downloaded from http://www.imshome.com/software_interfaces.html.

Installation and usages instructions are to be found in Part 1 of this document, Section 5.

Revision R031910

2 Speci cations

2.1 Mechanical speci cations

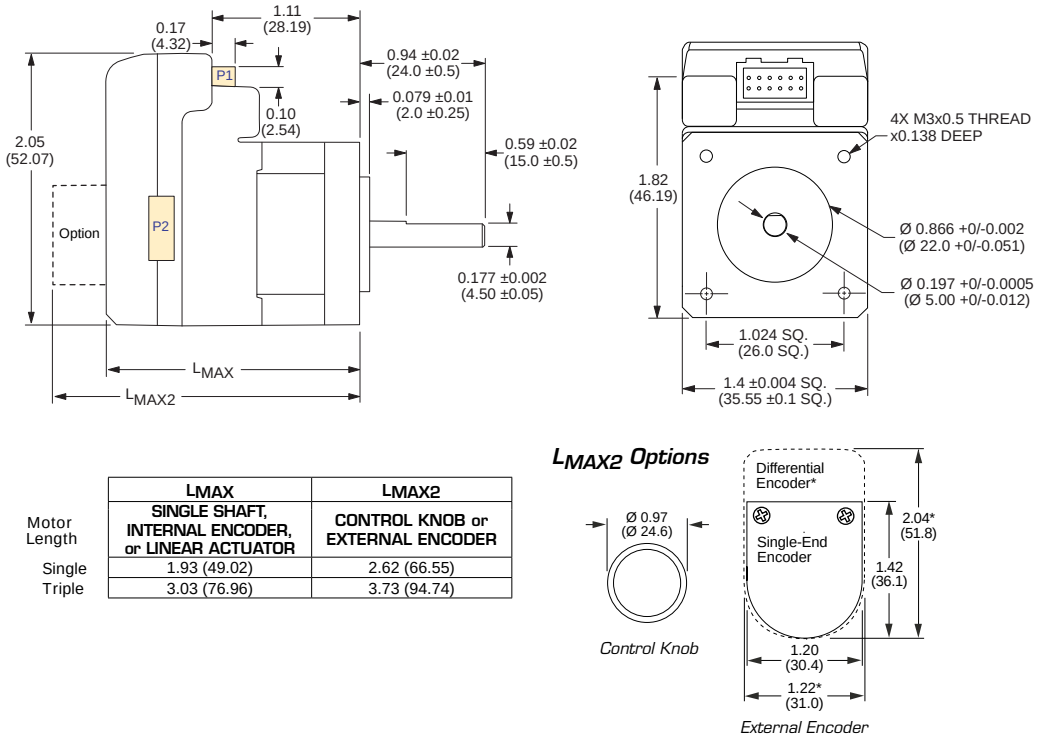

Motor Length	LMAX SINGLE SHAFT, INTERNAL ENCODER, or LINEAR ACTUATOR	LMAX2 CONTROL KNOB or EXTERNAL ENCODER
Single	1.93 (49.02)	2.62 (66.55)
Triple	3.03 (76.96)	3.73 (94.74)

Figure 2.1 External shaft mechanical speci cations - dimensions in inches (mm)

2.2 General speci cations

2.2.1 Electrical speci cations

	Condition	Min	Typ	Max	Unit
Input voltage range	—	+12	—	+48	VDC
Max power supply current	—	—	—	1.0*	A

**per MDrive 14, Actual current depends on voltage and load.*

Table 2.1 Electrical speci cations

2.2.2 Logic speci cations

	Condition	Min	Typ	Max	Unit
Universal Inputs					
Isolated input voltage range (sourcing or sinking)	Isolated inputs	+5	—	+24	VDC
Current	+5 VDC max	—	—	8.7	mA
Current	+24 VDC max	—	—	14.6	mA
Differential Inputs					
Voltage range	—	0	—	+5	VDC
High level input voltage	—	+3.75	—	+5.75	VDC
Low level input voltage	—	—	—	≤+1.2	VDC

Table 2.2 I/O speci cations

2.2.3 Communications speci cations

Protocol	SPI

Table 2.3 Communications speci cations

2.2.4 Thermal speci cations

		Min	Typ	Max	Unit
Heat sink temperature	non-condensing humidity	-40	—	+85	ºC
Motor temperature	non-condensing humidity	-40	—	+100	ºC

Table 2.4 Thermal speci cations

2.2.5 Motion speci cations

Number of microstep resolutions	20

Available microsteps per revolution

200	400	800	1000	1600	2000	3200	5000	6400	10000
12800	20000	25000	25600	40000	50000	51200	36000[1]	21600[2]	25400[3]

1=0.01 deg/µstep 2=1 arc minute/µstep *3=0.001 mm/µstep
** 1" per revolution lead screw*

Digital filter range	50 ns to 12.9 µs (10 MHz to 38.8 kHz)
Clock types	step/direction, up/down, quadrature
Step frequency (max)	5 MHz
Step frequency minimum pulse width	100 ns

Table 2.5 Motion speci cations

2.2.8 Motor speci cations

Spcification	Single length	Triple length
Holding torque oz-in (N-cm)	18.0 (12.71)	36.0 (25.0)
Detent torque oz-in (N-cm)	2.0 (1.4)	4.4 (3.1)
Rotor inertia oz-in-sec^2 (kg-cm^2)	0.00024 (0.017)	0.000801 (0.0566)
Weight motor and driver oz (g)	5.29 (150.0)	12.8 (380.0)

Table 2.8 Microstepping motor speci cations

2.2.9 Performance curves

Single length motor

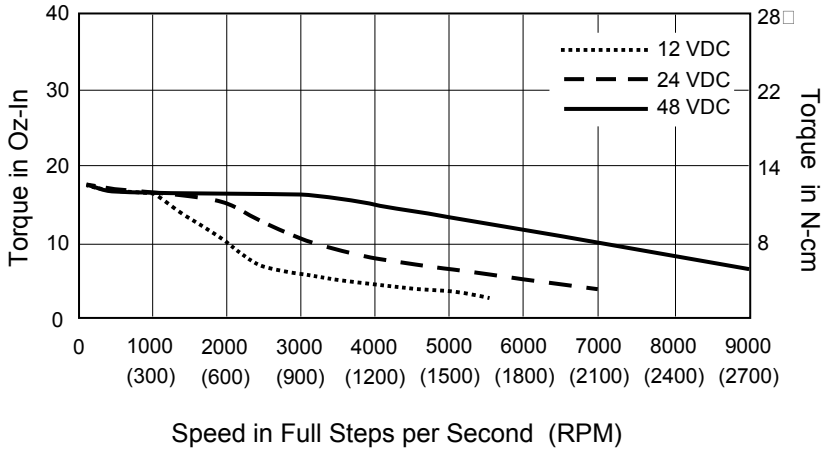

Figure 2.2 Performance curves - single length motor

Triple length motor

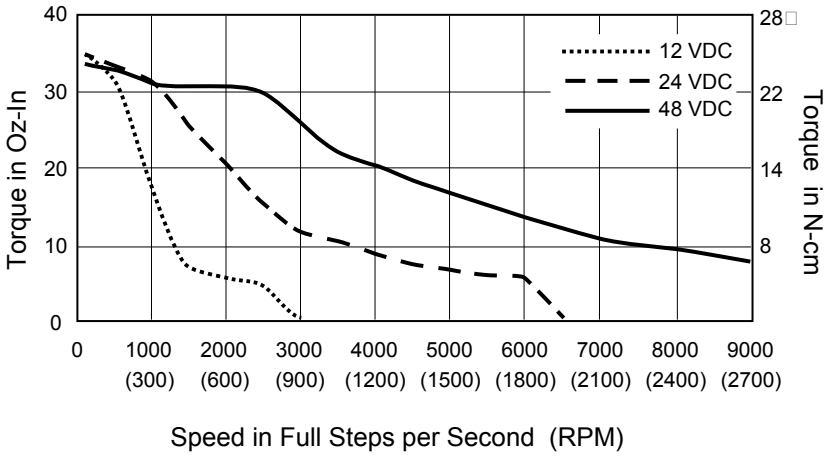

Figure 2.3 erformance curves - triple length motor

2.3 Connectivity speci cations/pin assignments

2.3.1 P1 — Power, communications and logic (universal inputs)

⚠ CAUTION

+5VDC OUTPUT

The +5 VDC output on connector P1 is for the express purpose of powering the IMS isolated communications converter cables. Do not use to power external devices.

Failure to follow these instructions may result in damage to system components!

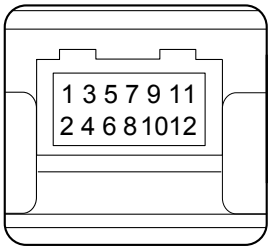

Connectivity Options
USB to SPI Converter:
MD-CC305-001

Mating connector kit:
CK-08

Mfg P/N:
Shell
JST PADP-12V-1-S

Pins
JST SPH-001T0.5L

Pin #	Function	Description
1	GND	Motor power supply return (ground)
2	+V	+12 to +48 VDC motor power supply input
3	OPTO	Optocoupler power supply input
4	SCLK	Step Clock input
5	EN	The Enable Input can be used to enable or disable the driver output circuitry.
6	DIR	The direction Input controls the clockwise/ counterclockwise direction of the motor. It may be configured as sinking or sourcing depending on the state of the Optocoupler Reference.
7	+5 VDC	+5 VDC output. This output is only to be used to power the optional communications converter cable MD-CC305-001. Do not use to power external devices.
8	CLK	SPI Clock
9	CGND	Communications ground
10	MOSI	SPI Master In - Slave Out
11	CS	SPI Chip Select input
12	MISO	SPI Master In - Slave Out

Table 2.9 P1 — Power, communications and logic, 12-oin locking wire crimp

2.3.1 P1 — Power, communications and logic (differential inputs)

⚠ CAUTION

ELECTRICAL OVERSTRESS

The universal logic inputs are tolerant to +24 VDC. The differential input version inputs are TTL level and only tolerent to +5 VDC:

Do not exceed +5 VDC on the differential inputs.

Failure to follow these instructions can result in equipment damage.

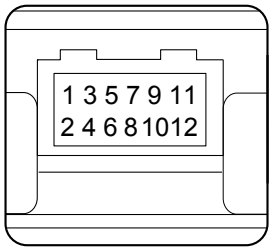

Connectivity Options
USB to SPI Converter:
MD-CC305-001

Mating connector kit:
CK-08

Mfg P/N:
Shell
JST PADP-12V-1-S

Pins
JST SPH-001T0.5L

Pin #	Function	Description
1	GND	Motor power supply return (ground)
2	+V	+12 to +48 VDC motor power supply input
3	CW+	Clockwise plus direction input.
4	CW —	Clockwise minus direction input.
5	CCW+	Counter-clockwise plus direction input.
6	CCW-	Counter-clockwise minus direction input.
7	+5 VDC	+5 VDC output. This output is only to be used to power the optional communications converter cable MD-CC305-001. Do not use to power external devices.
8	CLK	SPI Clock
9	CGND	Communications ground
10	MOSI	SPI Master In - Slave Out
11	CS	SPI Chip Select input
12	MISO	SPI Master In - Slave Out

Table 2.10 P1 — Power, communications and logic, 12-oin locking wire crimp

2.3.2 P2 —- Internal magnetic encoder (differential)

P2 is only present if the internal encoder option is selected.

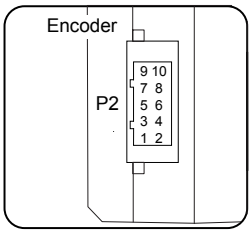

Connectivity Options
Prototypre development cable:
PD10-3400-FL3

Mating connector kit:
CK-02

Mfg P/N:
Shell
Hirose DF11-2428SC

Pins
Hirose DF11-TA2428HC

Pin #	Function	Description
1	GND	Encoder ground
2	CH A+	Channel A positive input
3	CH A-	Channel A negative input
4	CH B+	Channel B positive input
5	CH B-	Channel B negative input
6	IDX+	Index mark positive input
7	IDX-	Index mark negative input
8	N/C	Not connected
9	N/C	Not connected
10	N/C	Not connected

Table 2.11 P2 — Internal encoder option

2.5 Options

Drive Protection Module

The function of the DPM75 Drive Protection Module is to limit the surge current and voltage to a safe level when DC input power is switched on and off to a motor drive.

External Encoder

External optical encoders, single-end and differential, are offered factory-mounted with the MDrive 14. All encoders come with an index mark. Refer to the table below for available line counts and part numbers.

Line counts available: 100, 200, 250, 256, 400, 500, 512, 1000, 1024

Optional encoder cables are available. Order separately.

Single-end Cable (12.0”/30.5cm)..... ES-CABLE-2

Differential Locking Cable (6.0’/1.8m) ED-CABLE-6

Internal Encoder

Internal differential magnetic encoders with index mark are available with the MDrive 14 Microstepping.

Line counts available: 100, 200, 250, 256, 400, 500, 512, 1000

Differential Locking Cable (10.0’/3.0m) PD10-3400-FL3

Control Knob

The MDrive 14 is available with a factory-mounted rear control knob for manual shaft positioning.

Planetary Gearbox

Ef cient, low maintenance planetary gearboxes are offered assembled with the MDrive 14.

Differential Inputs

Changes the clock and direction inputs to differential +5 VDC inputs.

2.4 Connectivity

QuickStart Kit

For rapid design veri cation, all-inclusive QuickStart Kits have communication converter, prototype development cable(s), instructions and CD for MDrive initial functional setup and system testing.

Parameter Setup Cable

The optional 12.0' (3.6m) parameter setup cable assembly with inline USB to SPI converter, part number MD-CC305-001, facilitates communications, power and logic wiring and is recommended with rst order.

Mating Connector Kits

Use to build your own cables. Kit contains 5 mating shells with pins. Cable not supplied. Manufacturer's crimp tool recommended.

Mates to connector:

12-Pin Wire Crimp CK-08

Encoder Cable

The following 10.0' (3m) interface cable is recommended with rst orders for MDrive 14 with an internal encoder:

Internal Encoder: 10-Pin Cable PD10-3400-FL3

External Encoder (Single-end) ES-CABLE-2

External Encoder (differential) ES-CABLE-6

This page intentionally left blank

3 Mounting and connection recommendations

⚠ CAUTION

LEAD RESTRAINT

Some Microstepping mounting con gurations require that the MDrive move along the screw. Ensure that all cabling is properly restrained to provide strain relief on connection points..

Failure to follow these instructions can result in equipment damage.

⚠ CAUTION

MOUNTING SCREW TORQUE

When mounting the MDrive, do not exceed the maximum recommended tightening torque of 7.8 lb-in (9 kg-cm).

Failure to follow these instructions can result in equipment damage.

⚠ CAUTION

HOT PLUGGING!

Do not connect or disconnect power, logic, or communications while the device is in a powered state.

Remove DC power by powering down at the AC side of the DC power supply.

Failure to follow these instructions can result in equipment damage.

Revision R031910

3.1 Mounting

The maximum temperature for the MDrive 14 is 85°C measured at the heat sink, 100°C measured at the motor. Ensure that the unit is mounted to adequate heat sink plating to ensure that the temperature does not exceed 85°C.

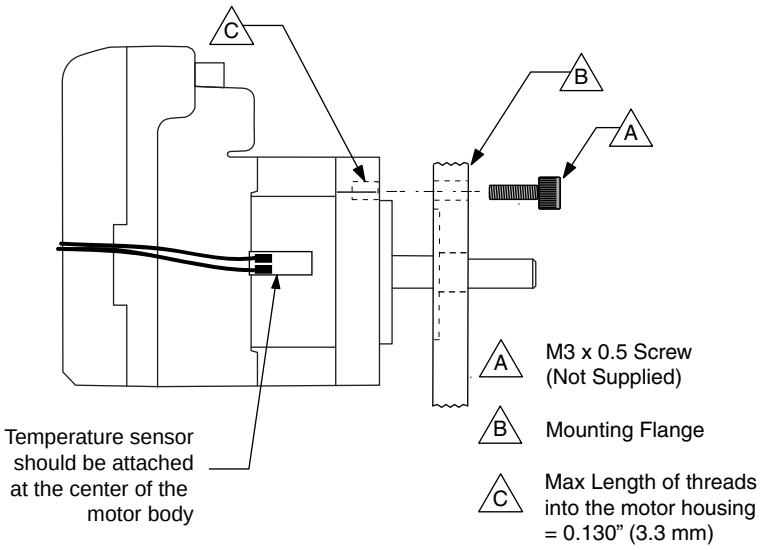

Drill Pattern for Mounting Flange or Adapter Plate

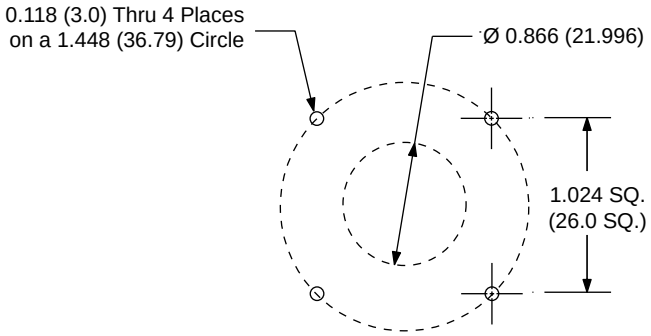

Figure 3.1 MDrive 14 Microstepping mounting and drill pattern

3.2 Layout and interface guidelines

⚠ DANGER

EXPOSED SIGNALS

Hazardous voltage levels may be present if using an open frame power supply to power the product.

Failure to follow these instructions will result in death or serious injury.

⚠ CAUTION

HOT PLUGGING!

Do not connect or disconnect power, logic, or communications while the device is in a powered state.

Remove DC power by powering down at the AC side of the DC power supply.

Failure to follow these instructions can result in equipment damage.

Logic level cables must not run parallel to power cables. Power cables will introduce noise into the logic level cables and make your system unreliable.

Logic level cables must be shielded to reduce the chance of EMI induced noise. The shield needs to be grounded at the signal source to earth. The other end of the shield must not be tied to anything, but allowed to oat. This allows the shield to act as a drain.

Power supply leads to the MDrive 14 need to be twisted. If more than one MDrive is to be connected to the same power supply, run separate power and ground leads from the supply to each driver.

3.2.1 Recommended Wiring

The following wiring/cabling is recommended for use with the MDrive 14:

Logic Wiring..... 22 AWG

Wire Strip Length..... 0.25” (6.0 mm)

Power, Ground ..... 20 AWG

4.2.2 Securing cabling

Some applications may require that the MDrive move with the axis motion. If this is a requirement of your application, the motor leads must be properly anchored. This will prevent exing and tugging which can cause damage at critical connection points.

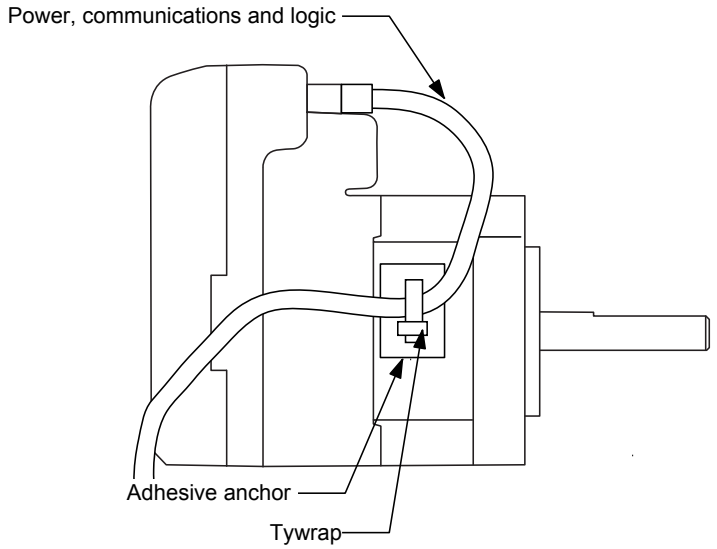

Figure 3.2 Secure leads

4 Connection and interface

⚠ DANGER

EXPOSED SIGNALS

Hazardous voltage levels may be present if using an open frame power supply to power the product.

Failure to follow these instructions will result in death or serious injury.

⚠ CAUTION

SWITCHING DC POWER/HOT PLUGGING

Do not connect or disconnect power, logic, or communications while the device is in a powered state.

Remove DC power by powering down at the AC side of the DC power supply.

Failure to follow these instructions can result in equipment damage.



Communications, DC power and logic are all interfaced using the 12-pin wire crimp connector at P1.

4.1 Interfacing communications



SPI communications may be interfaced using a 12-pin locking wire crimp connector at P1

For general SPI communications methods and practices please see Part 1, Section 5 of this document.

4.1.1 P1 — 12--pin wire crimp connector

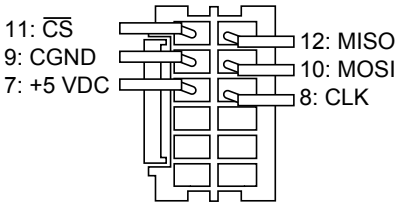

Pin #	Function	Description
7	+5V	+ 5 VDC output. Used to power the IMS communications converter ONLY! Not for general purpose use.
8	CLK	SPI clock
9	GND	Communications ground
10	MOSI	SPI master out - slave in
11	CS	SPI chip select, selected when low.
12	MISO	SPI master in - slave out

Table 4.1 Communications connections, P1 - 12-pin wire crimp

Connectivity accessories

Mating connector kit CK-08
(contains 5 connector shells and the appropriate quantity of pins to make 5 cables)

Prototype development cable (10'/3.0 m)..... PD12-1434-FL3

Communications converter cable (10'/3.0 m)..... MD-CC305-001

Manufacturer (JST) part numbers

Connector shell..... PADP-10V010S

Pins..... SPH-001T0.5L

4.3 Interfacing DC power

See part 1 of this document, section 3, for recommended power cable con gurations.

> **⚠ CAUTION**
>
> OVER VOLTAGE
>
> The DC voltage range for the MDrive 14 Microstepping is +12 to +48 VDC. Ensure that motor back EMF is factored into your power supply size calculations.
>
> Allow 2.0 A maximum power supply output current per MDrive 14 in the system. Actual power supply current will depend on voltage and load.
>
> **Failure to follow these instructions can result in equipment damage.**

4.3.1 Recommended power supply characteristics

Voltage range	+12 to +48 VDC
Type	Unregulated linear
Ripple	± 5%
Output current	1.0 A (per MDrive 1

Table 4.2 Recommended power supply characteristics

4.3.2 Recommended wire gauge

1 Ampere (Peak)					
Length (Feet)	10	25	50*	75*	100*
Minimum AWG	20	20	18	18	16
2 Amperes (Peak)					
Length (Feet)	10	25	50*	75*	100*
Minimum AWG	20	18	16	14	14

Table 4.3 Recommended power supply wire gauge

4.3.3 P1 — 12-pin locking wire crimp interface

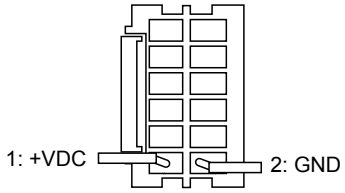

Pin #	*Signal*	*IMS cable wire colors*	
		MD-CC305-001	PD12B-14340-FL3
2	+12 to + 48 VDC	Red	See section 4.7.2 for wire colors.
1	Power ground	Black	

Table 4.4 Power and ground connections, 12-pin locking wire crimp

Connectivity accessories

Mating connector kit CK-08
(contains 5 connector shells and the appropriate quantity of pins to make 5 cables)

Prototype development cable (10'/3.0 m).....PD12B-1434-FL3

Communications converter cable (10'/3.0 m).....MD-CC305-001

Manufacturer (JST) part numbers

Connector shell.....PADP-12V-1-S

Pins..... SPH-001T0.5L

4.3.4 Power Interface using Drive Protection Module DPM75

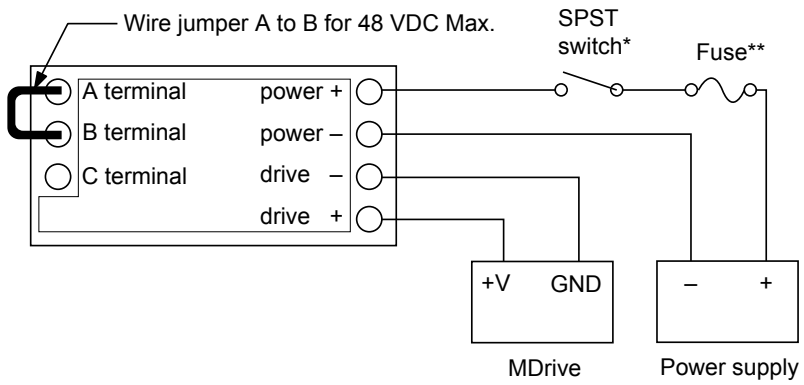

* Do not switch negative side of supply
**Fuse = 6.3 Amp slow blow (recommended: Bussman S505-6.3A or Littelfuse 215006.3). The fuse is optional.

Figure 4.1 DPM75 Drive Protection Module

4.4 Interfacing Logic (universal input)

See part 1 of this document, section 4, for logic interface con gurations and methods.

4.4.1 P1 — 12-pin locking wire crimp

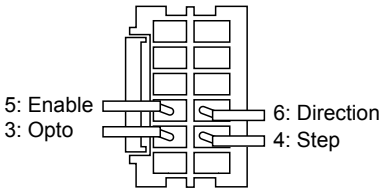

Pin #	*Signal*	*IMS cable wire colors*	
		MD-CC305-001	PD12B-1434-FL3
3	Opto reference	White	See section 4.7.2 for wire colors.
4	Step clock input	Green	
5	Enable input	Orange	
6	Direction input	Blue	

Table 4.5 Universal input connections, 12-pin locking wire crimp

Connectivity accessories

Mating connector kit CK-08
(contains 5 connector shells and the appropriate quantity of pins to make 5 cables)

Prototype development cable (10'/3.0 m)..... PD12B-1434-FL3

Communications converter cable (10'/3.0 m)..... MD-CC305-001

Manufacturer (JST) part numbers

Connector shell..... PADP-12V-1-S

Pins..... SPH-001T0.5L

4.5 Interfacing Logic (differential inputs)

> **⚠ CAUTION**
>
> **ELECTRICAL OVERSTRESS**
>
> The universal logic inputs are tolerant to +24 VDC. The differential input version inputs are TTL level and only tolerant to +5 VDC:
>
> Do not exceed +5 VDC on the differential inputs.
>
> **Failure to follow these instructions can result in equipment damage.**

4.5.3 P1 — 12-pin locking wire crimp

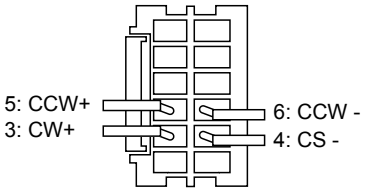

Pin #	*Signal*	*IMS cable wire colors*	
		MD-CC305-001	PD12B-1434-FL3
3	CW +	White	See section 4.7.2 for wire colors
4	CW —	Green	
5	CCW —	Orange	
6	CCW +	Blue	

Table 4.6 Differential input connections, 12-pin locking wire crimp

Connectivity accessories

Mating connector kit CK-08
(contains 5 connector shells and the appropriate quantity of pins to make 5 cables)

Prototype development cable (10'/3.0 m).....PD12B-1434-FL3

Communications converter cable (10'/3.0 m).....MD-CC305-001

Manufacturer (JST) part numbers

Connector shell.....PADP-12V-1-S

Pins..... SPH-001T0.5L

4.6 Optional encoder interface

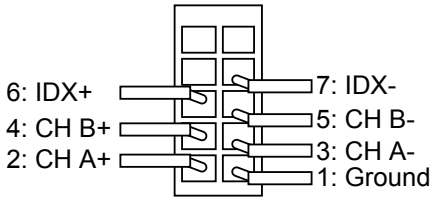

Pin #	*Signal*	*IMS cable wire color*
		PD10-3400-FL3
1	GND	White/Brown
2	CH A+	White/green
3	CH A-	Green/white
4	CH B+	White/orange
5	CH B-	Orange/white
6	IDX+	White/blue
7	IDX-	Blue/white
8-10	No Connect	

Table 4.7 P2 - Optional encoder interface

onnectivity accessories

Mating connector kit CK-02
(contains 5 connector shells and the appropriate quantity of pins to make 5 cables)

Manufacturer (Hirose) part numbers

Connector shell..... DF11-10DS-2C

Pins..... DF11-2428SC

4.7 Connectivity accessory details

4.7.1 USB to SPI communications converter cables

The MD-CC305-001 is an interface cable which combines Power, Logic and communications with an inline USB to SPI converter.

It is recommended with the rst purchase.

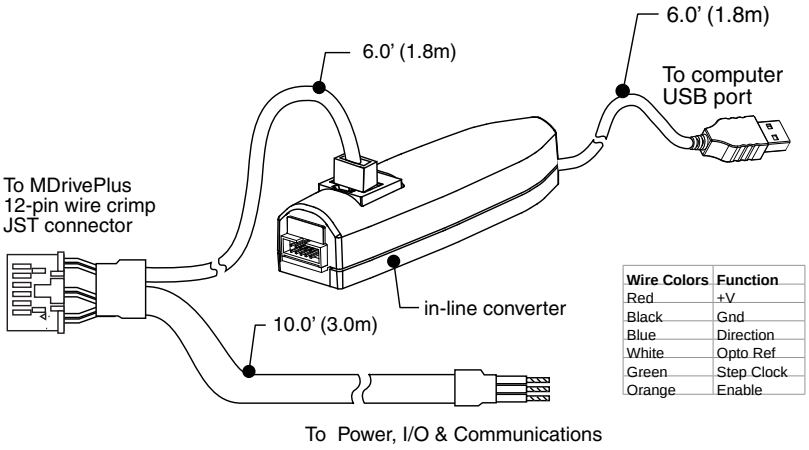

Wire Colors	Function
Red	+V
Black	Gnd
Blue	Direction
White	Opto Ref
Green	Step Clock
Orange	Enable

Figure 4.2 MD-CC305-001 USB to SPI converter cable

4.7.2 PD12B-1434-FL3 prototype development cable

Description: Pre-wired mating connector interfaces to an MDrive's 12-pin wire crimp connector, with ying leads other end, for quick test/ development.

Function: I/O, Power & Communications Interface.

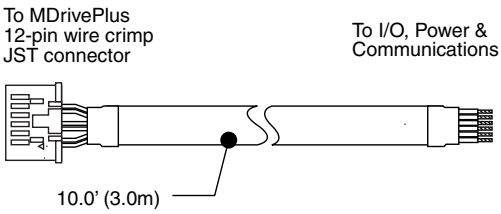

Pair	Wire Colors	Function
1	Black	GND
	Red	+V
2	Black	Comm GND
	White	MOSI
3	Black	CS
	Green	MISO
4	Black	Opto Ref
	Blue	+5 VDC Out
5	Black	Step Clock
	Yellow	Enable
6	Black	Direction
	Brown	SPI Clock

Figure 4.3 Prototype development cable PD12B-1434-FL3

4.7.3 Mating connector kits

Use to build your own cables. Kit contains 5 mating shells with pins. Cable not supplied. Manufacturer's crimp tool recommended.

Mates to connector:

P1 12-pin wire crimp.....CK-08

P2 10-pin wire crimp (encoder) CK-02

MDrive® 17
Microstepping

CE RoHS

1. Introduction
2. Speci cations
3. Mounting Recommendations
4. Interface and Connectivity

This page intentionally left blank

Table of Contents

1 Introduction 1-1
1.1 MDrive 17 unit overview 1-1
1.3 Product identi cation 1-2
1.4 Documentation reference 1-3
1.5 Product software 1-3

2 Speci cations 2-1
2.1 Mechanical speci cations 2-1
2.1.1 MDrive 17 mechanical speci cations 2-1
2.1.2 MDrive 17-65 mechanical speci cations 2-2
2.2 General speci cations 2-3
2.2.1 Electrical speci cations 2-3
3.2.2 Logic speci cations 2-3
3.2.3 Communications speci cations 2-3
3.2.4 Thermal speci cations 2-3
3.2.5 Motion speci cations 2-4
2.2.8 Motor speci cations 2-4
2.2.9 Speed-force performance curves 2-4
2.3 Connectivity speci cations/pin assignments - Communications 2-6
2.3.1 SPI communications - connector P2 2-6
2.4 Connectivity speci cations/pin assignments - power and logic 2-7
2.4.1 Power and logic (universal inputs) 2-7
2.4.2 Power and logic (differential inputs) 2-8
2.4.3 Power, logic and communications — 12-pin wire crimp (universal input) 2-9
2.4.4 Power, logic, communications and optional encoder — 19-pin M23 (universal input) 2-10
2.4.5 Power, logic and communications (differential input) 2-11
2.5 Connectivity speci cations/pin assignments - internal encoder 2-12
2.5 Options 2-13
2.6 Connectivity 2-13

3 Mounting and connection recommendations 3-1
3.1 Mounting 3-1
3.2 Layout and interface guidelines 3-3
3.2.1 Rules of wiring 3-3
3.2.2 Rules of shielding 3-3
3.3 Recommended wiring 3-4
3.3.1 Recommended mating connectors and pins 3-4
3.4 Securing power leads and logic leads 3-4

Revision R031910

4 Connection and interface 4-1
4.1 Interfacing communications..... 4-1
4.1.1 P2 - 10-pin IDC style connector..... 4-2
4.1.2 P1 - 12-pin wire crimp connector..... 4-2
4.1.3 P1 - 19-pin M23 circular connector..... 4-3
4.3 Interfacing DC power..... 4-3
4.2.1 Recommended IMS power supplies..... 4-4
4.2.2 Recommended wire gauge..... 4-4
4.3.3 P1 — 12’ (30.5 cm) ying leads interface..... 4-5
4.3.4 P1 — 7-pin pluggable terminal interface..... 4-5
4.3.5 P1 — 12-pin locking wire crimp interface 4-5
4.3.6 P1 — 19-pin M23 circular interface 4-5
4.3.7 Power Interface using Drive Protection Module ..... DPM75..... 4-5
4.4 Interfacing Logic (universal input) 4-6
4.4.1 P1 — 12’ (30.5 cm) ying leads interface..... 4-6
4.4.2 P1 — 7-pin pluggable terminal interface..... 4-6
4.4.3 P1 — 12-pin locking wire crimp 4-6
4.4.3 P1 — 19-pin M23 circular connector 4-7
4.5 Interfacing Logic (differential inputs) 4-7
4.5.1 P1 — 12’ (30.5 cm) ying leads interface..... 4-7
4.5.2 P1 — 7-pin pluggable terminal interface..... 4-8
4.5.3 P1 — 12-pin locking wire crimp 4-8
4.6 Encoder interface 4-9
4.6.1 P4 — 10-pin wire crimp 4-9
4.6.3 P1 — 19-pin M23 circular connector 4-9
4.7 USB to SPI communications converters 4-10
4.7.1 USB to 10-pin wire crimp — MD-CC300-001 .. 4-10
4.7.2 USB to 12-pin wire crimp — MD-CC303-001 .. 4-10
4.7.3 USB to 19-pin M23 circular — MD-CC301-0014-11
4.8 Prototype development cables..... 4-12
4.8.1 P1 — 12-pin locking wire crimp PD12-1434-FL3 4-12
4.8.1 P2 — 19-pin M23 circular connector MD-CS10x-000..... 4-12
4.8.3 P4 — 10-pin wire crimp ED-CABLE-6 4-13
4.9 Mating connector kits 4-13

List of Figures

Figure 1.1 Standard product options 1-2
Figure 2.1 MDrive 17 Mechanical Speci cations 2-1
Figure 2.2 MDrive 17-65 Mechanical Speci cations 2-2
Figure 2.3 Single length motor 2-4
Figure 2.4 Double length motor 2-5
Figure 2.5 Triple length motor 2-5
Figure 3.1 MDrive Microstepping mounting and drill pattern 3-2
Figure 3.2 Securing leads 3-5
Figure 4.1 DPM75 Drive Protection Module 4-5
Figure 4.2 MD-CC300-001 communications converter cable 4-10
Figure 4.3 MD-CC303-001 communications converter cable 4-10
Figure 4.4 MD-CC301-001 communications converter 4-11
Figure 4.4 Prototype development cable PD12-1434-FL3 4-12
Figure 4.5 MD-CS10x-000 prototype development cordset 4-12
Figure 4.6 Encoder interface cable ED-CABLE-JST10 4-13

Revision R031910

List of Tables

Table 2.1 Electrical speci cations 2-3
Table 2.2 I/O speci cations 2-3
Table 2.3 Communications speci cations 2-3
Table 2.4 Thermal speci cations 2-3
Table 2.5 Motion speci cations 2-4
Table 2.6 Microstepping motor speci cations 2-4
Table 2.7 P2 communications, 10-pin locking wire crimp 2-6
Table 2.8 Power and logic interface - 12” (308.8.mm) ying leads 2-7
Table 2.9 Power and logic interface - 7-pin pluggable terminal 2-7
Table 2.10 Power and logic interface - 12” (308.8.mm) ying leads 2-8
Table 2.11 Power and logic interface - 7-pin pluggable terminal 2-8
Table 2.12 P1 Power, logic and communications 2-9
Table 2.13 P1 Power, logic, communications and optional encoder 2-10
Table 2.14 P1 Power, logic and communications 2-11
Table 2.15 P1 Power, logic and communications 2-12
Table 4.1 Communications connections, P2 - 10-pin IDC 4-2
Table 4.2 Communications connections, 12-pin locking wire crimp 4-2
Table 4.3 SPI communications, 19-pin M23 circular 4-3
Table 4.4 Recommended power supply characteristics 4-4
Table 4.5 Recommended power supply wire gauge 4-4
Table 4.6 Power and ground connections, ying leads 4-4
Table 4.7 Power and ground connections, 7-pin terminal 4-4
Table 4.8 Power and ground connections, 12-pin locking wire crimp 4-4
Table 4.9 Power and ground connections, 12-pin locking wire crimp 4-5
Table 4.10 Universal input connections, ying leads 4-6
Table 4.11 Universal input connections, 7-pin terminal 4-6
Table 4.12 Universal input connections, 12-pin locking wire crimp 4-6
Table 4.13 Universal input connections, 12-pin locking wire crimp 4-7
Table 4.14 Differential input connections, ying leads interface 4-7
Table 4.15 Differential input connections, 7-pin terminal 4-8
Table 4.16 Differential input connections, 12-pin locking wire crimp 4-8
Table 4.17 P4 - Encoder interface 4-9
Table 4.18 Encoder interface - 19-pin M23 circular connector 4-9

1 Introduction

The MDrive® 17 Microstepping high torque integrated motor and step and direction driver is ideal for designers who want the simplicity of a motor with on-board electronics. The integrated electronics of the MDrive 17 eliminate the need to run motor cabling through the machine, reducing the potential for problems due to electrical noise.

1.1 MDrive 17 unit overview

The unsurpassed smoothness and performance delivered by the MDrive 17 Microstepping are achieved through advanced 2nd generation current control. By applying innovative techniques to control current ow through the motor, resonance is signi cantly dampened over the entire speed range and audible noise is reduced.

The MDrive 17 accepts a broad input voltage range from +12 to +48 VDC, delivering enhanced performance and speed. Oversized input capacitors are used to minimize power line surges, reducing problems that can occur with long runs and multiple drive systems. An extended operating range of –40° to +85°C provides long life, trouble free service in demanding environments.

The MDrive 17 uses a NEMA 17 frame size high torque brushless step motor integrated with a microstepping driver, and accepts up to 20 resolution settings from full to 256 microsteps per full step, including: degrees, metric and arc minutes. These settings may be changed on-the- y or downloaded and stored in nonvolatile memory with the use of a simple GUI which is provided. This eliminates the need for external switches or resistors. Parameters are changed via an SPI port.

For use in environments where exposure to chemical, dust and liquids may occur, a sealed MDrive 17-65 Microstepping unit with 19-pin M23 circular connector meets IP65 speci cations.1

The versatile MDrive 17 Microstepping is available in multiple con gurations to t various system needs. Rotary motor versions come in three lengths and may include an encoder, control knob or planetary gearbox. Long life Acme screw linear actuators are also available.

Numerous connector styles give you choices for the best t and features. Select from 12.0” (30.5cm) ying leads, pluggable terminal strip, locking wire crimp connectors1, and M23 circular connectors on IP65 sealed versions1.

MDrive connectivity has never been easier with options ranging from all-inclusive QuickStart Kits to individual interfacing cables and mating connector kits to build your own cables.

The MDrive 17 is a compact, powerful and cost effective motion control solution that will reduce system cost, design and assembly time for a large range of brushless step motor applications.

Revision R031910

1.3 Product identi cation

Plus
base version

K MDM ☐ ☐ S ☐17 ☐4 – OPTION

QuickStart Kit
details above

Input Version
1 = Universal
5 = Differential

Motor
A = Single Length & Linear Actuator
B = Double Length
C = Triple Length

P1: I/O & Power
F = 12" Flying Leads
P = Pluggable Clamp Type Terminal Strip
C = 12-Pin Locking Wire Crimp (Includes I/O, Power & Comm)
Not available with Differential Input Version

P2: Communications
D = SPI with 10-Pin IDC Connector
Z = None. Used with 12-Pin Locking Wire Crimp in Position P1, which includes Communications.

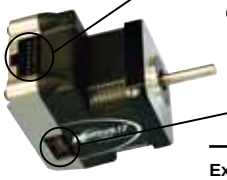

Example #1: Part Number **MDM1PSD17A4** is an MDrive17Plus Microstepping with pluggable I/O & power interface, SPI communications with 10-pin IDC connector, and NEMA 17 single length motor.

Plus-65
IP65 sealed

K MDM2MSZ17 ☐ 4 – OPTION

QuickStart Kit
details above

Motor
A = Single Length
B = Double Length
C = Triple Length

P1: I/O, Power & Communications
19-Pin M23 Circular Connector

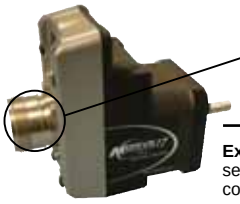

Example #2: Part Number **MDM2MSZ17B4** is an MDrive17Plus-65 Microstepping sealed with IP65 rating, 19-pin M23 I/O, power and communications circular connector, and NEMA 17 double length motor.

OPTIONS

External Encoder **–E ☐**

Refer to external encoder table above for line counts and part numbers.

Example: **MDM1PSD17A4–EHL** adds an external 500-line count differential optical encoder with index mark to example #1.
Not available with sealed –65 versions.

Internal Encoder **–E ☐**

Refer to internal encoder table above for line counts and part numbers.

Example: **MDM1PSD17A4–ECM** adds an internal 250-line count differential magnetic encoder with index mark to example #1.

Control Knob **–N**

Example: **MDM1PSD17A4–N a**dds a rear control knob for manual positioning to example #1.
Not available with sealed –65 versions.

Planetary Gearbox **–G ☐☐☐ – F**

Refer to gearbox page for complete table of ratios and part numbers.

Optional NEMA Flange

Example: **MDM1PSD17A4–G1A2** adds a 1-stage planetary gearbox with 5.18:1 ratio to example #1. Add –F for optional NEMA flange.

Figure 1.1 Standard product options

Revision R031910

1.4 Documentation reference

The following user's manuals are available for the MDrive 17:

- Product manual, describes the technical data, installation, con guration and programming of the product.
- Quick Reference, describes the basic wiring, connection and use of this product. The quick reference is shipped in printed form with the product.

This documentation is also available for download from the IMS web site at http://www.imshome.com

1.5 Product software

The MDrive 17 microstepping integrated motor and driver is con gured using the SPI motor interface graphical user interface. This free software may be downloaded from http://www.imshome.com/software_interfaces.html.

Installation and usages instructions are to be found in Part 1 of this document, Section 5.

This page has been intentionally left blank.

2 Speci cations

2.1 Mechanical speci cations

2.1.1 MDrive 17 mechanical speci cations

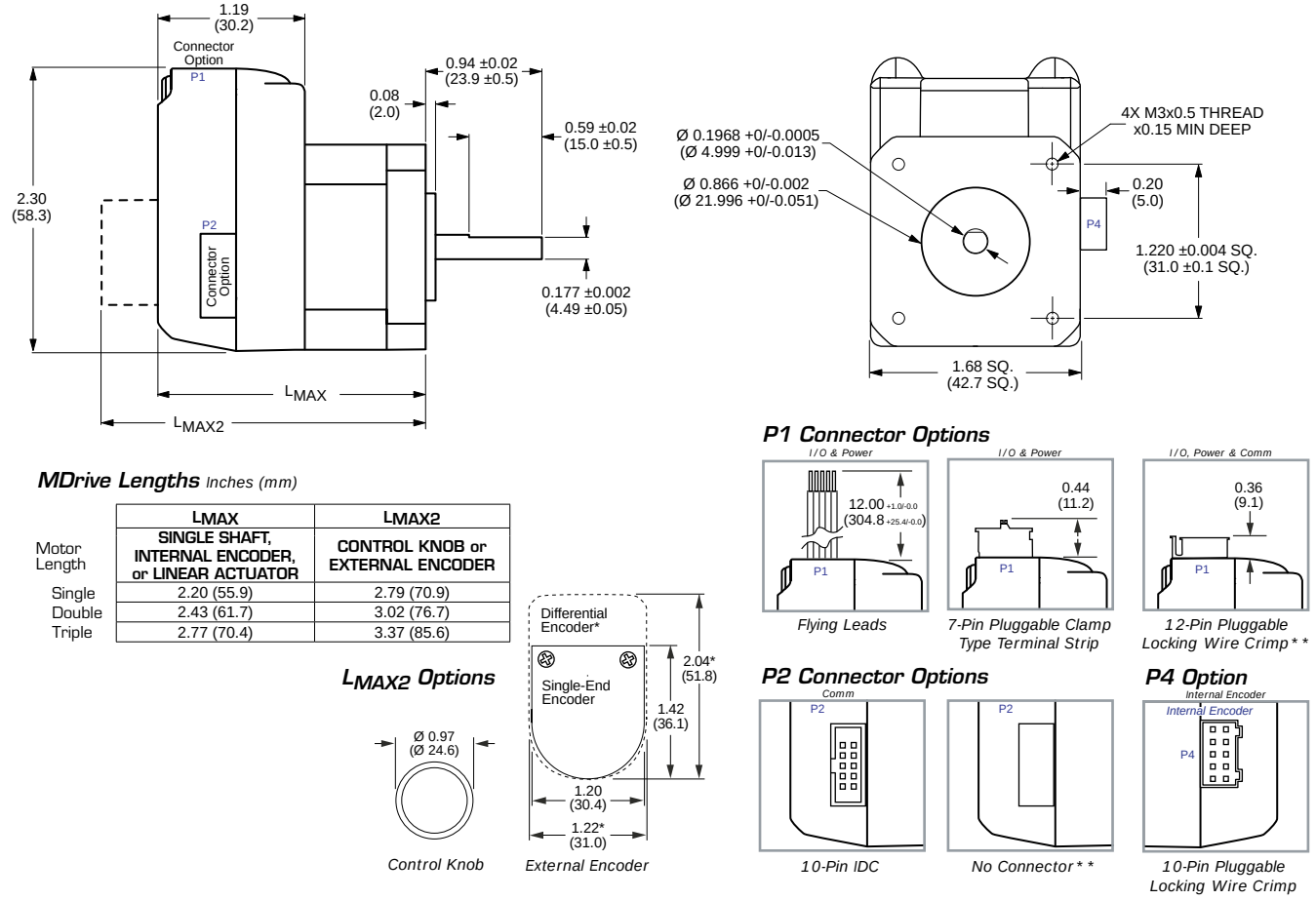

MDrive Lengths *Inches (mm)*

Motor Length	LMAX SINGLE SHAFT, INTERNAL ENCODER, or LINEAR ACTUATOR	LMAX2 CONTROL KNOB or EXTERNAL ENCODER
Single	2.20 (55.9)	2.79 (70.9)
Double	2.43 (61.7)	3.02 (76.7)
Triple	2.77 (70.4)	3.37 (85.6)

** 12-Pin Pluggable Locking Wire Crimp connector at P1 eliminates the P2 connector.

Figure 2.1 MDrive 17 Mechanical Speci cations

2.1.2 MDrive 17-65 mechanical speci cations

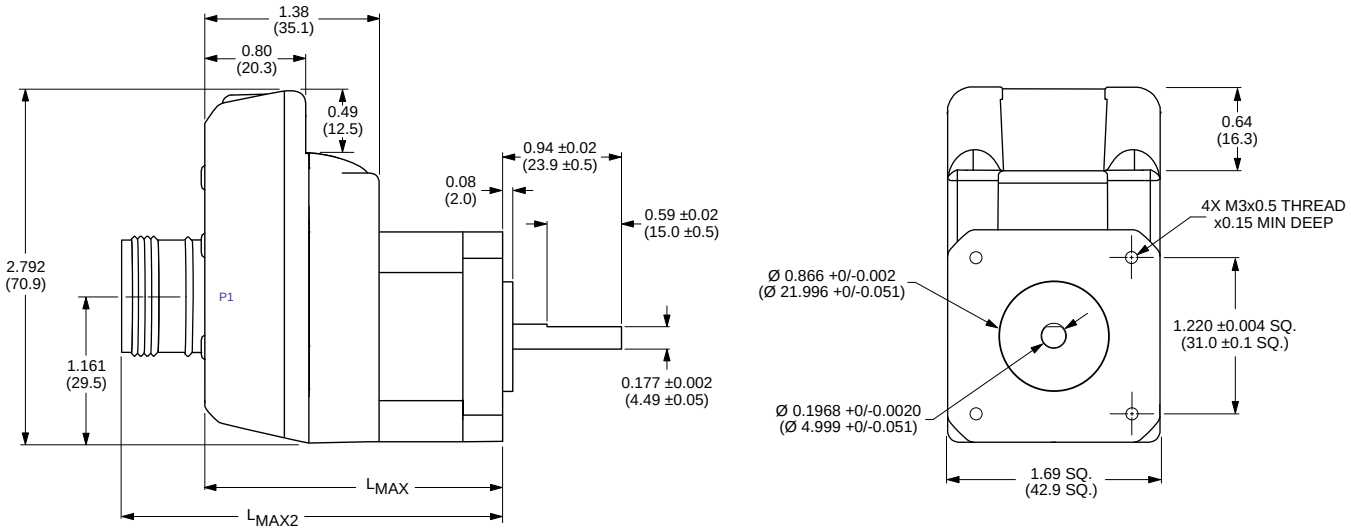

Sealed MDrive Lengths *Inches (mm)*

Motor Length	LMAX	LMAX2
Single	2.39 (60.71)	3.06 (77.72)
Double	2.62 (66.55)	3.29 (83.57)
Triple	2.96 (75.18)	3.63 (92.20)

Connector

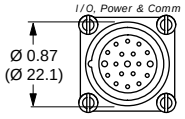

Figure 2.2 MDrive 17-65 Mechanical Speci cations

2.2 General speci cations

2.2.1 Electrical speci cations

	Condition	Min	Typ	Max	Unit
Input voltage range	—	+12	—	+48	VDC
Max power supply current	—	—	—	2.0*	A

**per MDrive 17, Actual current depends on voltage and load.*

Table 2.1 Electrical speci cations

3.2.2 Logic speci cations

	Condition	Min	Typ	Max	Unit
Universal Inputs					
Isolated input voltage range (sourcing or sinking)	Isolated inputs	+5	—	+24	VDC
Current	+5 VDC max	—	—	8.7	mA
Current	+24 VDC max	—	—	14.6	mA
Differential Inputs					
Voltage range	—	0	—	+5	VDC
High level input voltage	—	+3.75	—	+5.75	VDC
Low level input voltage	—	—	—	≤+1.2	VDC

Table 2.2 I/O speci cations

3.2.3 Communications speci cations

Protocol	SPI

Table 2.3 Communications speci cations

3.2.4 Thermal speci cations

		Min	Typ	Max	Unit
Heat sink temperature	non-condensing humidity	-40	—	+85	ºC
Motor temperature	non-condensing humidity	-40	—	+100	ºC

Table 2.4 Thermal speci cations

3.2.5 Motion speci cations

Number of microstep resolutions	20

Available microsteps per revolution

200	400	800	1000	1600	2000	3200	5000	6400	10000
12800	20000	25000	25600	40000	50000	51200	36000[1]	21600[2]	25400[3]

1=0.01 deg/µstep 2=1 arc minute/µstep *3=0.001 mm/µstep
** 1" per revolution lead screw*

Digital filter range	50 ns to 12.9 µs (10 MHz to 38.8 kHz)
Clock types	step/direction, up/down, quadrature
Step frequency (max)	5 MHz
Step frequency minimum pulse width	100 ns

Table 2.5 Motion speci cations

2.2.8 Motor speci cations

Specification	Single length	Double length	Triple length
Holding torque oz-in (N-cm)	32 (22.6)	60 (42.4)	74.9 (52.9)
Detent torque oz-in (N-cm)	1.66 (1.17)	2.08 (1.47)	3.47 (2.45)
Rotor inertia oz-in-sec^2 (kg-cm^2)	0.00053 (0.038)	0.00080 (0.057)	0.00116 (0.082)
Weight motor and driver oz (g)	10.4 (294.8)	12.0 (340.2)	15.2 (430.9)

Table 2.6 Microstepping motor speci cations

2.2.9 Speed-force performance curves

Single length motor

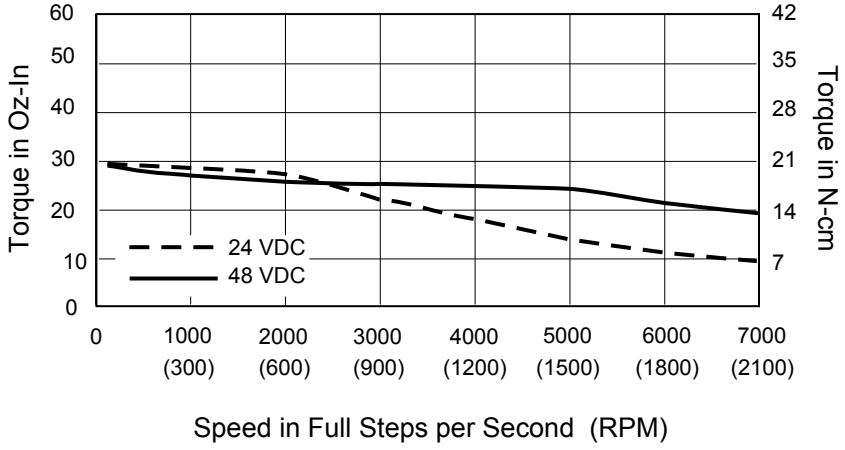

Figure 2.3 Single length motor

Double length motor

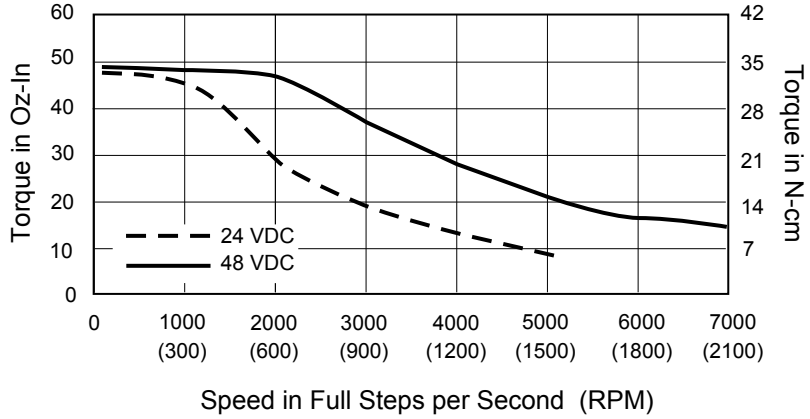

Figure 2.4 Double length motor

Triple length motor

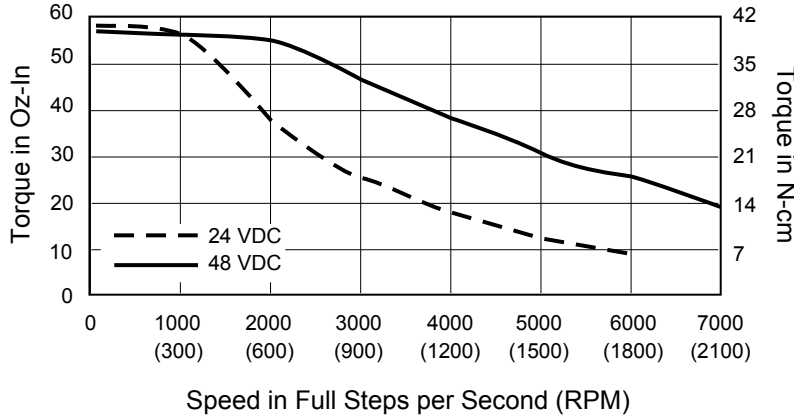

Figure 2.5 Triple length motor

2.3 Connectivity speci cations/pin assignments - Communications

2.3.1 SPI communications - connector P2

⚠ CAUTION

+5VDC OUTPUT

The +5 VDC output on connector P2 is for the express purpose of powering the IMS isolated communications converter cables. Do not use to power external devices.

Failure to follow these instructions may result in damage to system components!

If using the model MDrive with the 12-pin locking wire crimp connector at connector position P1, the P2 connector is eliminated and SPI communications are bundled with power and logic.

10-pin IDC style connector

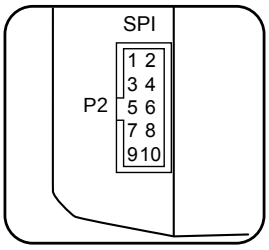

Connectivity Options
USB to SPI Converter:
MD-CC300-001

Mating connector kit:
CK-01 (ribbon cable not included)

Mfg P/N:
Shell
SAMTEC TSD-05-01-N

Ribbon cable
Tyco: 1-57051-9

Pin #	Function	Description
1	N/C	Not connected
2	N/C	Not connected
3	N/C	Not connected
4	CS	SPI chip select, selected when low.
5	GND	Communications ground
6	+5V	+ 5 VDC output. Used to power the IMS communications converter ONLY! Not for general purpose use.
7	MOSI	SPI master out - slave in
8	CLK	SPI clock
9	N/C	Not connected
10	MISO	SPI master in - slave out

Table 2.7 P2 communications, 10-pin locking wire crimp

2.4 Connectivity speci cations/pin assignments - power and logic

2.4.1 Power and logic (universal inputs)

12” (304.8 mm) flying leads

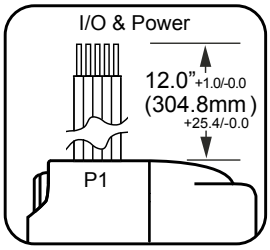

Wire Color	Function	Description
White	Opto	Optocoupler reference
Orange	Step clock	Step clock input
Blue	Direction	CW/CCW direction input
Brown	Enable	Output bridge enable input
Black	GND	Power ground
Red	+V	Motor Power (+12 to +48 VDC)

Table 2.8 Power and logic interface - 12” (308.8.mm) ying leads

7-pin pluggable terminal

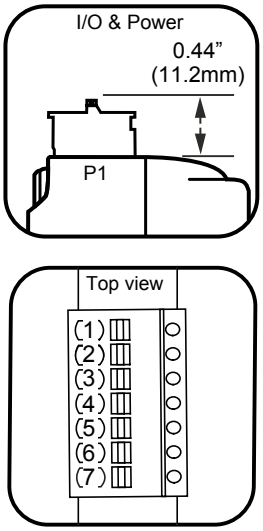

Pin #	Function	Description
1	Opto	Optocoupler reference
2	N/C	Not connected
3	Step clock	Step clock input
4	Direction	CW/CCW direction input
5	Enable	Output bridge enable input
6	GND	Power ground
7	+V	Motor Power (+12 to +48 VDC)

Table 2.9 Power and logic interface - 7-pin pluggable terminal

2.4.2 Power and logic (differential inputs)

⚠ CAUTION

ELECTRICAL OVERSTRESS

The universal logic inputs are tolerant to +24 VDC. The differential input version inputs are TTL level and only tolerent to +5 VDC:

Do not exceed +5 VDC on the differential inputs.

Failure to follow these instructions can result in equipment damage.

12" (304.8 mm) flying leads

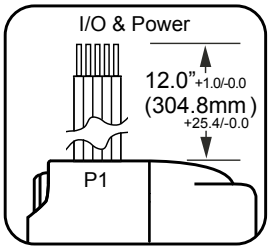

Wire Color	Function	Description
White	CW +	Clockwise plus input
Orange	CW -	Clockwise minus input
Blue	CCW -	Counter-clockwise minus input
Brown	CCW +	Counter-clockwise plus input
Black	GND	Power ground
Red	+V	Motor Power (+12 to +48 VDC)

Table 2.10 Power and logic interface - 12" (308.8.mm) ying leads

7-pin pluggable terminal

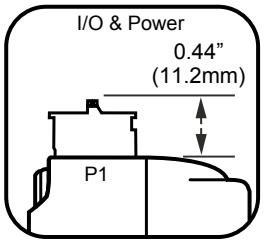

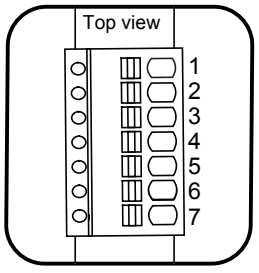

Pin #	Function	Description
1	CW +	Clockwise plus input
2	N/C	Not connected
3	CW -	Clockwise minus input
4	CCW -	Counter-clockwise minus input
5	CCW +	Counter-clockwise plus input
6	GND	Power ground
7	+V	Motor Power (+12 to +48 VDC)

Table 2.11 Power and logic interface - 7-pin pluggable terminal

2.4.3 Power, logic and communications — 12-pin wire crimp (universal input)

⚠ CAUTION

CONNECTOR PRODUCT ALERT!

The manufacturer of the Tyco 12-pin connector has begun marking the connector shell, PN 1-794617-2. with pin numbers as shown in the diagram on the right.

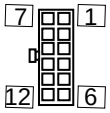

Disregard these markinings

Disregard these pin number markings. Use the pin numbering scheme as shown below.

Failure to follow these instructions can result in equipment damage.

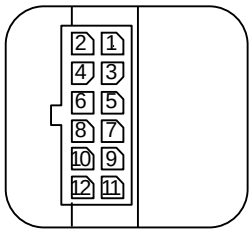

Connectivity Options
USB to SPI Converter:
MD-CC303-001

Prototype development cable:
PD12-1434-FL3

Mating connector kit:
CK-03

Mfg P/N:
Shell
Tyco: 1-794617-2

Pins
Tyco: 794610-1

Pin #	Function	Description
1	GND	Motor power supply return (ground)
2	+V	+12 to +48 VDC motor power supply input
3	OPTO	Optocoupler power supply input
4	SCLK	Step Clock input
5	EN	The Enable Input can be used to enable or disable the driver output circuitry.
6	DIR	The direction Input controls the clockwise/ counterclockwise direction of the motor. It may be configured as sinking or sourcing depending on the state of the Optocoupler Reference.
7	+5 VDC	+5 VDC output. This output is only to be used to power the optional communications converter cable MD-CC305-001. Do not use to power external devices.
8	CLK	SPI Clock
9	CGND	Communications ground
10	MOSI	SPI Master In - Slave Out
11	CS	SPI Chip Select input
12	MISO	SPI Master In - Slave Out

Table 2.12 P1 Power, logic and communications

2.4.4 Power, logic, communications and optional encoder — 19-pin M23 (universal input)

Outside: Pins 1 -12

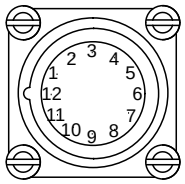

Inside: Pins 13 -19

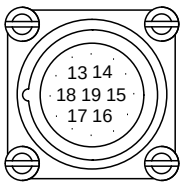

Connectivity Options
USB to SPI Converter:
MD-CC301-001

Prototype development cable:
MD-CS100-000 (straight)
MD-CS101-000 (right-angle)

Pin #	Function	Description
1	Opto Reference	The signal applied to the optocoupler reference will determine the sinking/ or sourcing configuration of the inputs. To set the inputs for sinking operation, a +5 to +24 VDC supply is connected. If sourcing, the reference is connected to ground
2	Enable	Enable/disable input will enable or disable the driver output to the motor. In the disconnected state the driver outputs are enabled in either sinking or sourcing configuration. Can be configured as active high or active low.
3	IDX+	Encoder index + output.
4	CH B+	Encoder channel B+ output.
5	CH B-	Encoder channel B- output.
6	+V	+12 to +48 VDC motor power supply input.
7	CH A+	Encoder channel A+ output.
8	MOSI	Master-out/slave-in. Carries output data from the SPI Master to the MDO.
9	CS	SPI chip select. This signal is used to turn communications on multiple MDM units on or off.
10	+5 VDC Output	Supply voltage for the MD-CC301-000 Converter Cable ONLY!
11	GND	Communications ground.
12	Connector Shell	Connector shell,
13	Direction/ Channel B/ Clock Down	Direction input. The axis direction will be with respect to the state of the direction override parameter. It may also receive quadrature and clock up type inputs if so configured.
14	IDX-	Encoder index - output
15	CH A-	Encoder channel A - output
16	SPI Clock	The clock is driven by the SPI Master. The clock cycles once for each data bit.
17	MISO	Master-in/slave-out. Carries output data from the MDM back to the SPI Master.
18	Step Clock/ Channel A/ Clock Up	Step clock input. The step clock input will receive the clock pulses which will step the motor 1 step for each pulse. It may also receive quadrature and clock up type inputs if so configured.
19	GND	Power ground

Table 2.13 P1 Power, logic, communications and optional encoder

2.4.5 Power, logic and communications (differential input)

⚠ CAUTION

ELECTRICAL OVERSTRESS

The universal logic inputs are tolerant to +24 VDC. The differential input version inputs are TTL level and only tolerent to +5 VDC:

Do not exceed +5 VDC on the differential inputs.

Failure to follow these instructions can result in equipment damage.

⚠ CAUTION

CONNECTOR PRODUCT ALERT!

The manufacturer of the Tyco 12-pin connector has begun marking the connector shell, PN 1-794617-2. with pin numbers as shown in the diagram on the right.

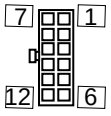

Disregard these markinings

Disregard these pin number markings. Use the pin numbering scheme as shown below.

Failure to follow these instructions can result in equipment damage.

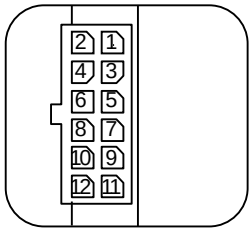

Connectivity Options
USB to SPI Converter:
MD-CC303-001

Prototype development cable:
PD12-1434-FL3

Mating connector kit:
CK-03

Mfg P/N:
Shell
Tyco: 1-794617-2

Pins
Tyco: 794610-1

Pin #	Function	Description
1	GND	Motor power supply return (ground)
2	+V	+12 to +48 VDC motor power supply input
3	CW+	Positive clockwise input
4	CW-	Negative clockwise input
5	CCW+	Positive counter-clockwise input
6	CCW-	Negative counter-clockwise input
7	+5 VDC	+5 VDC output. This output is only to be used to power the optional communications converter cable MD-CC303-001. Do not use to power external devices.
8	CLK	SPI Clock
9	CGND	Communications ground
10	MOSI	SPI Master In - Slave Out
11	CS	SPI Chip Select input
12	MISO	SPI Master In - Slave Out

Table 2.14 P1 Power, logic and communications

2.5 Connectivity speci cations/pin assignments - internal encoder

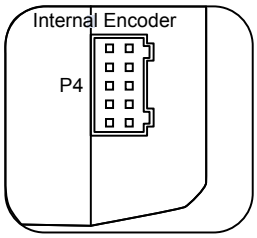

Pin #	Function	Description
1	GND	Encoder ground
2	CH A+	Channel A positive input
3	CH A-	Channel A negative input
4	CH B+	Channel B positive input
5	CH B-	Channel B negative input
6	IDX+	Index mark positive input
7	IDX-	Index mark negative input
8	N/C	Not connected
9	N/C	Not connected
10	N/C	Not connected

Table 2.15 P1 Power, logic and communications

2.5 Options

Drive Protection Module

The function of the DPM75 Drive Protection Module is to limit the surge current and voltage to a safe level when DC input power is switched on and off to the MDrive.

Internal encoder

Internal differential magnetic encoders with index mark are available with the MDrive Microstepping.

Line counts available: 100, 200, 250, 256, 400, 500, 512, 800, 1000

2.6 Connectivity

QuickStart kit

For rapid design veri cation, all-inclusive QuickStart Kits have communication converter, prototype development cable(s), instructions and CD for MDrive Microstepping initial functional setup and system testing.

Communication Converters

Electrically isolated, in-line converters pre-wired with mating connectors to conveniently set/program communication parameters for a single MDrive product via a PC's USB port. Length 12.0' (3.6m).

Mates to connector:

P2 10-pin IDC MD-CC300-001

P1 12 pin locking wire crimp MD-CC303-001

P1 19-pin M23 circular MD-CC301-001

Prototype Development Cables

Speed test/development with pre-wired mating connectors that have y-ing leads other end. Length 10.0' (3.0m).

Mates to connector:

P1 12-pin locking wire crimp PD12-1434-FL3

P4 10-pin wire crimp (encoder) ED-CABLE-JST10

P1 19-pin M23 circular (straight) MD-CS100-000

P1 19-pin M23 circular (right-angle) MD-CS101-000

Mating Connector Kits

Use to build your own cables. Kit contains 5 mating shells with pins. Cable not supplied. Manufacturer's crimp tool recommended.

Mates to connector:

P2 10-pin IDC CK-01

P1 12-pin wire crimp CK-03

P4 10-pin wire crimp CK-13

Page intentionally left blank

3 Mounting and connection recommendations

⚠ CAUTION

LEAD RESTRAINT

Some Microstepping mounting con gurations require that the MDrive move along the screw. Ensure that all cabling is properly restrained to provide strain relief on connection points..

Failure to follow these instructions can result in equipment damage.

⚠ CAUTION

MOUNTING SCREW TORQUE

When mounting the MDrive, do not exceed the maximum recommended tightening torque of 7.8 lb-in (9 kg-cm).

Failure to follow these instructions can result in equipment damage.

3.1 Mounting

Care must be observed when installing the mounting screws on ALL MDrive 17 versions. The mounting holes on the ange are not drilled through and have a maximum depth of 0.150” (3.81 mm).

The warning note and Figure below illustrate the maximum safe thread length and maximum torque for mounting all versions of the MDrive 17.

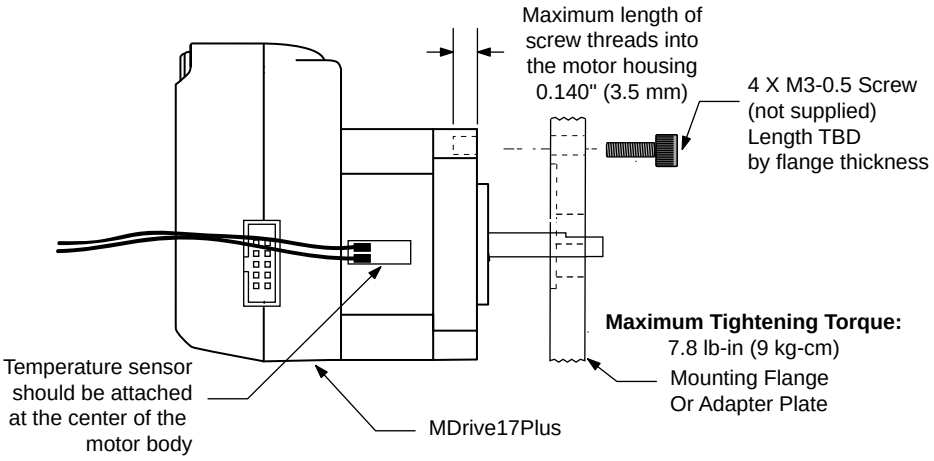

Drill Pattern for Mounting Flange or Adapter Plate

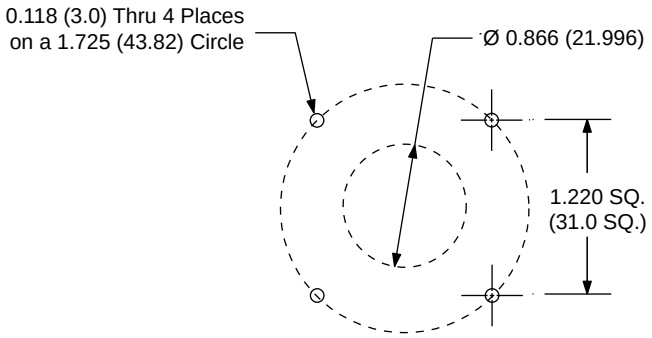

Figure 3.1 Mdrive Microstepping mounting and drill pattern

3.2 Layout and interface guidelines

Logic level cables must not run parallel to power cables. Power cables will introduce noise into the logic level cables and make your system unreliable.

Logic level cables must be shielded to reduce the chance of EMI induced noise. The shield needs to be grounded at the signal source to earth. The other end of the shield must not be tied to anything, but allowed to oat. This allows the shield to act as a drain.

Power supply leads to the MDrive 17 need to be twisted. If more than one driver is to be connected to the same power supply, run separate power and ground leads from the supply to each driver.

3.2.1 Rules of wiring

- Power Supply and Motor wiring should be shielded twisted pairs, and run separately from signal-carrying wires.
- A minimum of one twist per inch is recommended.
- Motor wiring should be shielded twisted pairs using 20 gauge, or for distances of more than 5 feet, 18 gauge or better.
- Power ground return should be as short as possible to established ground.
- Power supply wiring should be shielded twisted pairs of 18 gauge for less than 4 amps DC and 16 gauge for more than 4 amps DC.

3.2.2 Rules of shielding

- The shield must be tied to zero-signal reference potential. It is necessary that the signal be earthed or grounded, for the shield to become earthed or grounded. Earthing or grounding the shield is not effective if the signal is not earthed or grounded.
- Do not assume that Earth ground is a true Earth ground. Depending on the distance from the main power cabinet, it may be necessary to sink a ground rod at the critical location.
- The shield must be connected so that shield currents drain to signal-earth connections.
- The number of separate shields required in a system is equal to the number of independent signals being processed plus one for each power entrance.
- The shield should be tied to a single point to prevent ground loops.
- A second shield can be used over the primary shield; however, the second shield is tied to ground at both ends.

Revision R031910

3.3 Recommended wiring

The following wiring/cabling is recommended for use with the MDrive 17:

Logic Wiring..... 22 AWG

Wire Strip Length..... 0.25” (6.0 mm)

Power and Ground ..... 20 AWG

3.3.1 Recommended mating connectors and pins

Communications

10-pin IDC (P2)..... SAMTEC TCSD-05-01-N

Recommended ribbon cable..... Tyco 1-57051-9

Logic and Power

The following mating connectors are recommended for the MDrive

12-pin Locking Wire Crimp Connector Shell..... Tyco 1-794617-2

Crimp Pins..... Tyco 794610-1

3.4 Securing power leads and logic leads

Some applications may require that the MDrive move with the axis motion. If this is a requirement of your application, the motor leads (ying, pluggable or threaded) must be properly anchored. This will prevent exing and tugging which can cause damage at critical connection points within the MDrive.

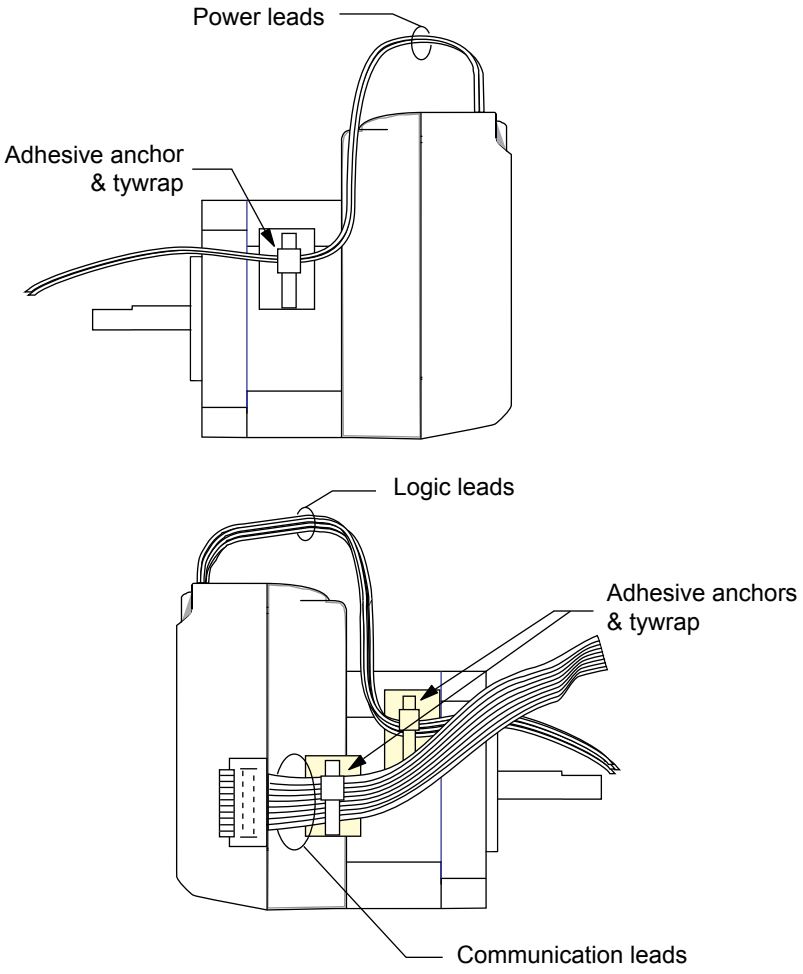

Figure 3.2 Securing leads

This page intentionally left blank

4 Connection and interface

⚠ DANGER

EXPOSED SIGNALS

Hazardous voltage levels may be present if using an open frame power supply to power the product.

Failure to follow these instructions will result in death or serious injury.

⚠ CAUTION

SWITCHING DC POWER/HOT PLUGGING

Do not connect or disconnect power, logic, or communications while the device is in a powered state.

Remove DC power by powering down at the AC side of the DC power supply.

Failure to follow these instructions can result in equipment damage.

⚠ CAUTION

CONNECTOR PRODUCT ALERT!

The manufacturer of the Tyco 12-pin connector has begun marking the connector shell, PN 1-794617-2. with pin numbers as shown in the diagram on the right.

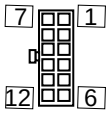

Disregard these markinings

Disregard these pin number markings. Use the pin numbering scheme as shown in this document.

Failure to follow these instructions can result in equipment damage.

4.1 Interfacing communications

SPI communications may be interfaced using one of two possible connector options:

1. 10-pin IDC connector at P2
2. 12-pin locking wire crimp connector at P1
3. 19-pin M23 circular connector at P1

If using the 12-pin locking wire crimp connector or M23 circular at P1, there will be no P2 connector. The P1 option will bundle power, logic and communications on a single connector.

For general SPI communications methods and practices please see Part 1, Section 5 of this document.

If using the model MDrive with the 12-pin locking wire crimp connector at connector position P1, the P2 connector is eliminated and SPI communications are bundled with power and logic.

4.1.1 P2 - 10-pin IDC style connector

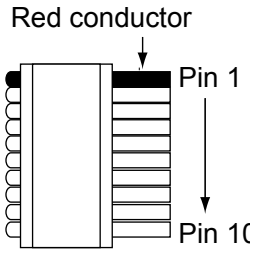

Pin #	Function	Description
1	N/C	Not connected
2	N/C	Not connected
3	N/C	Not connected
4	CS	SPI chip select, selected when low.
5	GND	Communications ground
6	+5V	+ 5 VDC output. Used to power the IMS communications converter ONLY! Not for general purpose use.
7	MOSI	SPI master out - slave in
8	CLK	SPI clock
9	N/C	Not connected
10	MISO	SPI master in - slave out

Table 4.1 Communications connections, P2 - 10-pin IDC

Connectivity accessories

Mating connector kit CK-01
(contains 5 connector shells, ribbon cable not included)

Communications converter cable (10'/3.0 m).....MD-CC300-001

Manufacturer (SAMTEC) part numbers

Connector shell.....TCSD-05-01-N

Ribbon cable.....Tyco 1-57051-9

4.1.2 P1 - 12-pin wire crimp connector

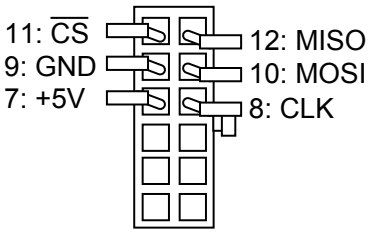

Pin #	*Signal*	*IMS cable wire colors*	
		MD-CC303-001	PD14-1434-FL3
7	+ 5 VDC output	—	White/brown
8	SPI clock	—	White/green
9	Comm ground	—	Green/white
10	SPI MOSI	—	White/gray
11	SPI chip select	—	Gray/white
12	SPI MISO	—	Brown/white

Table 4.2 Communications connections, 12-pin locking wire crimp

Connectivity accessories

Mating connector kit CK-03
(contains 5 connector shells and the appropriate quantity of pins to make 5 cables)

Prototype development cable (10'/3.0 m)..... PD12-1434-FL3

Manufacturer (Tyco) part numbers

Connector shell.....1-794617-2

Pins.....794610-1

Revision R031910

4.1.3 P1 - 19-pin M23 circular connector

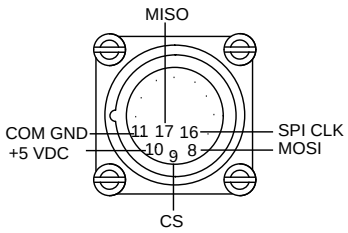

Pin #	*Signal*	*IMS cable wire colors*	
		MD-CC301-001	MD-CS10x-000
7	+ 5 VDC output	—	White/gray
8	SPI clock	—	Yellow
9	Comm ground	—	Black
10	SPI MOSI	—	White/green
11	SPI chip select	—	White/yellow
12	SPI MISO	—	Pink

Table 4.3 SPI communications, 19-pin M23 circular

A mating connector kit is not available for this connector. Shop for compatible connectors at:

- Lumberg
- Phoenix
- Turck
- RDE Connectors

4.3 Interfacing DC power

See part 1 of this document, section 3, for recommended power cable con gurations.

⚠ CAUTION

OVER VOLTAGE

The DC voltage range for the MDrive 17 is +12 to +48 VDC. Ensure that motor back EMF is factored into your power supply size calculations.

Allow 2.0 A maximum power supply output current per MDrive 17 in the system. Actual power supply current will depend on voltage and load.

Failure to follow these instructions can result in equipment damage.

4.2.1 Recommended power supply characteristics

Voltage range	+12 to +48 VDC
Type	Unregulated linear
Ripple	± 5%
Output current	2.0 A (per MDrive 17

Table 4.4 Recommended power supply characteristics

4.2.2 Recommended wire gauge

Cable Length: Feet (meters)	10 (3.0)	25 (7.6)	50 (15.2)	75 (22.9)	100 (30.5)
Amps Peak	**Minimum AWG**				
1 Amp Peak	20	20	18	18	18
2 Amps Peak	20	18	16	14	14

Table 4.5 Recommended power supply wire gauge

4.3.3 P1 — 12’ (30.5 cm) ying leads interface

Wire Color	
Red	+12 to +48 VDC supply
Black	Power ground

Table 4.6 Power and ground connections, ying leads

4.3.4 P1 — 7-pin pluggable terminal interface

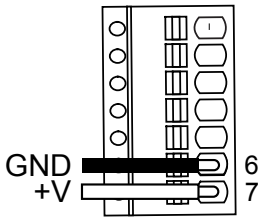

Pin #	
6	Power ground
7	+12 to +48 VDC supply

Table 4.7 Power and ground connections, 7-pin terminal

4.3.5 P1 — 12-pin locking wire crimp interface

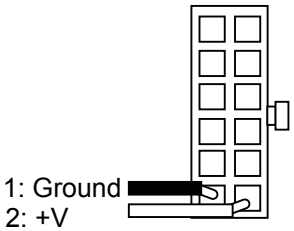

Pin #	***Signal***	***Wire colors***	
		MD-CC303-001	PD12-1434-FL3
2	+12 to +48 VDC supply	Red	Red
1	Power ground	Black	Black

Table 4.8 Power and ground connections, 12-pin locking wire crimp

Connectivity accessories

Mating connector kit CK-03
(contains 5 connector shells and the appropriate quantity of pins to make 5 cables)

Prototype development cable (10'/3.0 m)..... PD12-1434-FL3

Manufacturer (Tyco) part numbers

Connector shell.....1-794617-2

Pins.....794610-1

4.3.6 P1 — 19-pin M23 circular interface

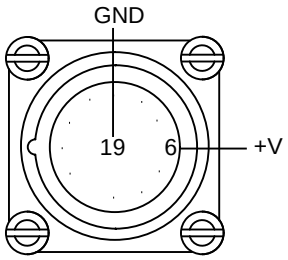

Pin #	*Signal*	*Wire colors*	
		MD-CC301-001	MD-CS10x-000
6	+12 to +48 VDC supply	Blue	Blue
19	Power ground	Brown	Brown

Table 4.9 Power and ground connections, 12-pin locking wire crimp

A mating connector kit is not available for this connector. Shop for compatible connectors at:

- Lumberg
- Phoenix
- Turck
- RDE Connectors

4.3.7 Power Interface using Drive Protection Module DPM75

The DPM75 Drive Protection Module will limit surge currents for up to three (3) MDrive 17 units at up to 48 VDC to allow switching DC Power.

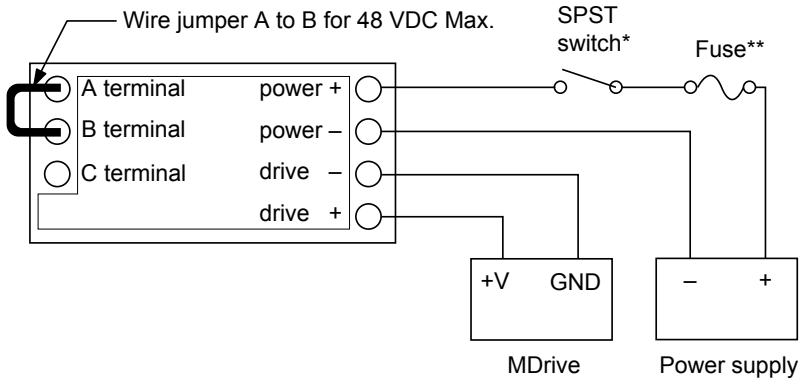

* Do not switch negative side of supply
**Fuse = 6.3 Amp slow blow (recommended: Bussman S505-6.3A or Littelfuse 215006.3). The fuse is optional.

Figure 4.1 DPM75 Drive Protection Module

Revision R031910

4.4 Interfacing Logic (universal input)

See part 1 of this document, section 6, for logic interface con gurations and methods.

4.4.1 P1 — 12’ (30.5 cm) ying leads interface

Wire Color	*Signal*
White	Opto reference
Orange	CW/CCW direction input
Blue	Step clock input
Brown	Enable input

Table 4.10 Universal input connections, ying leads

4.4.2 P1 — 7-pin pluggable terminal interface

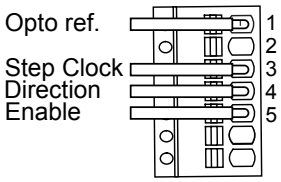

Pin #	*Signal*
1	Opto reference
3	CW/CCW direction input
4	Step clock input
5	Enable input

Table 4.11 Universal input connections, 7-pin terminal

4.4.3 P1 — 12-pin locking wire crimp

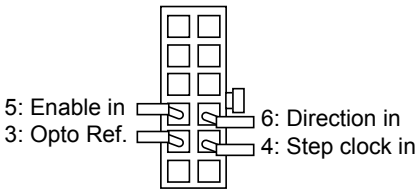

Pin #	*Signal*	*Wire colors*	
		MD-CC303-001	PD12-1434-FL3
3	Opto reference	White	White/blue
4	Step clock input	Green	Blue/white
5	Enable input	Orange	White/orange
6	Direction input	Blue	Orange/white

Table 4.12 Universal input connections, 12-pin locking wire crimp

Connectivity accessories

Mating connector kit CK-03
(contains 5 connector shells and the appropriate quantity of pins to make 5 cables)

Prototype development cable (10’/3.0 m)..... PD12-1434-FL3

Manufacturer (Tyco) part numbers

Connector shell.....1-794617-2

Pins.....794610-1

Revision R031910

4.4.3 P1 — 19-pin M23 circular connector

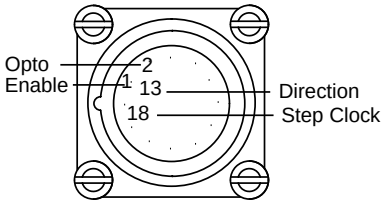

Pin #	*Signal*	*Wire colors*	
		MD-CC301-001	MD-CS10x-000
1	Opto reference	Violet	Violet
18	Step clock input	Gray/brown	Gray/brown
2	Enable input	Red	Red
13	Direction input	Yellow/brown	Yellow/brown

Table 4.13 Universal input connections, 12-pin locking wire crimp

A mating connector kit is not available for this connector. Shop for compatible connectors at:

- Lumberg
- Phoenix
- Turck
- RDE Connectors

4.5 Interfacing Logic (differential inputs)

⚠ CAUTION

ELECTRICAL OVERSTRESS

The universal logic inputs are tolerant to +24 VDC. The differential input version inputs are TTL level and only tolerant to +5 VDC:

Do not exceed +5 VDC on the differential inputs.

Failure to follow these instructions can result in equipment damage.

4.5.1 P1 — 12’ (30.5 cm) ying leads interface

Wire Color	*Signal*
White	CW +
Orange	CW —
Blue	CCW —
Brown	CCW +

Table 4.14 Differential input connections, ying leads interface

4.5.2 P1 — 7-pin pluggable terminal interface

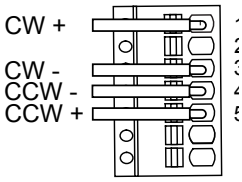

Pin #	*Signal*
1	CW +
3	CW —
4	CCW —
5	CCW +

Table 4.15 Differential input connections, 7-pin terminal

4.5.3 P1 — 12-pin locking wire crimp

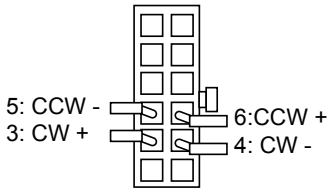

Pin #	*Signal*	*Wire colors*	
		MD-CC303-001	PD12-1434-FL3
3	CW +	White	White/blue
4	CW —	Green	Blue/white
5	CCW —	Orange	White/orange
6	CCW +	Blue	Orange/white

Table 4.16 Differential input connections, 12-pin locking wire crimp

Connectivity accessories

Mating connector kit CK-03
(contains 5 connector shells and the appropriate quantity of pins to make 5 cables)

Prototype development cable (10'/3.0 m)..... PD12-1434-FL3

Manufacturer (Tyco) part numbers

Connector shell.....1-794617-2

Pins.....794610-

4.6 Encoder interface

4.6.1 P4 — 10-pin wire crimp

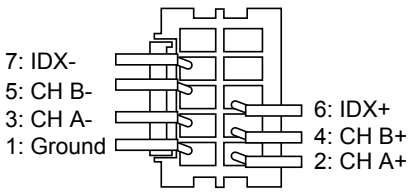

Pin #	*Signal*	*Wire color*
		ED-CABLE-JST10
1	GND	White/Brown
2	CH A+	White/green
3	CH A-	Green/white
4	CH B+	White/orange
5	CH B-	Orange/white
6	IDX+	White/blue
7	IDX-	Blue/white
8	No Connect	Brown/white

Table 4.17 P4 - Encoder interface

4.6.3 P1 — 19-pin M23 circular connector

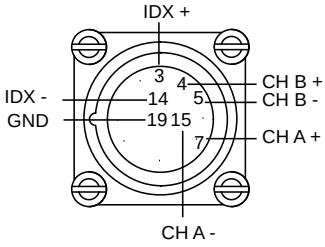

Pin #	*Signal*	*Wire colors*	
		MD-CC301-001	MD-CS10x-000
3	Index +	Gray	Gray
4	Channel B +	Red/blue	Red/blue
5	Channel B -	Green	Green
7	Channel A -	Gray/pink	Gray/pink
14	Index -	Brown/green	Brown/green
15	Channel A +	White	White
19	Ground	Brown	Brown

Table 4.18 Encoder interface - 19-pin M23 circular connector

A mating connector kit is not available for this connector. Shop for compatible connectors at:

- Lumberg
- Phoenix
- Turck
- RDE Connectors

4.7 USB to SPI communications converters

4.7.1 USB to 10-pin wire crimp — MD-CC300-001

Electrically isolated in-line USB to SPI converter pre-wired with mating connector to conveniently program and set con guration parameters.

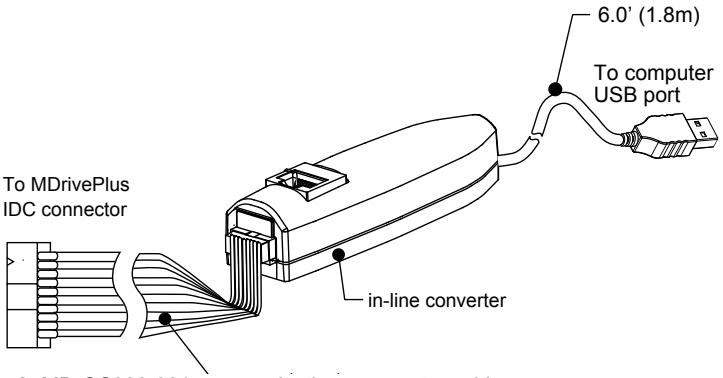

Figure 4.2 MD-CC300-001 communications converter cable

4.7.2 USB to 12-pin wire crimp — MD-CC303-001

Electrically isolated in-line USB to SPI converter pre-wired with mating connector to conveniently program and set con guration parameters. Power and logic signals are bundled into this connector via a second cable with signal accessibility via ying leads.

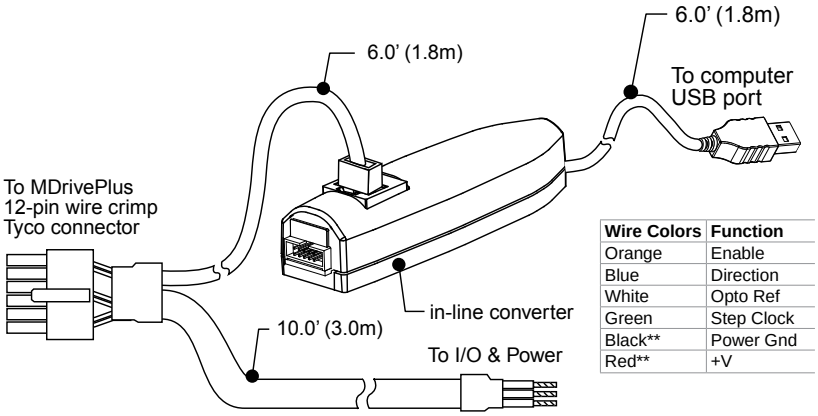

Wire Colors	Function
Orange	Enable
Blue	Direction
White	Opto Ref
Green	Step Clock
Black**	Power Gnd
Red**	+V

Figure 4.3 MD-CC303-001 communications converter cable

4.7.3 USB to 19-pin M23 circular — MD-CC301-001

Electrically isolated in-line USB to SPI converter pre-wired with mating connector to conveniently program and set con guration parameters. Power and logic signals are bundled into this connector via a second cable with signal accessibility via ying leads.

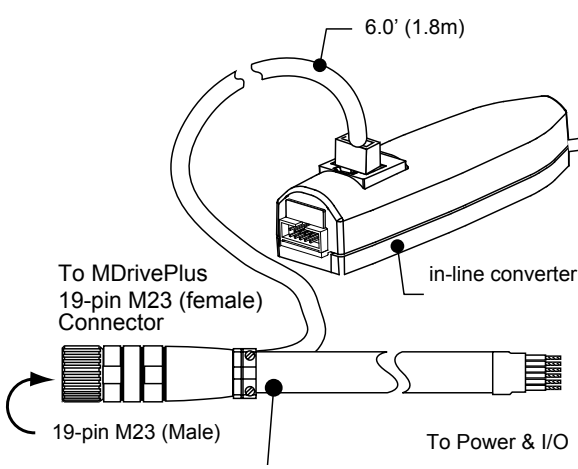

Wire Colors	Function
Violet	Opto Ref.
Red	Enable
Blue	+V*
Black	Comm GND
Green/Yellow	Shell
Yellow/Brown	Direction
Gray/Brown	Step Clock
Brown	Power GND*
Optional internal encoder	
Gray	Index +
Red/blue	Channel B +
Green	Channel B -
Gray/pink	Channel A -
Brown/green	Index -
White	Channel A +

Figure 4.4 MD-CC301-001 communications converter

4.8 Prototype development cables

4.8.1 P1 — 12-pin locking wire crimp PD12-1434-FL3

The PD12-1434-FL3 prototype development cable is used to rapidly interface the MDrive to the users power, communications and logic interface. This 10' (3.0 m) cable consists of a 12-pin locking wire crimp connector to plug directly into the MDrive P1 connector with ying leads on the opposite end to interface to power, communications and logic.

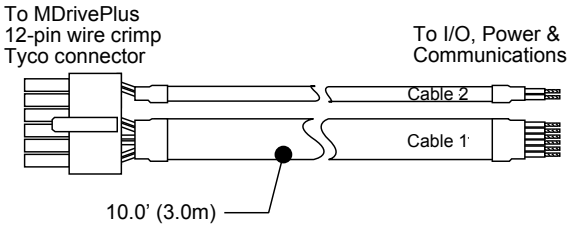

Wire Colors	Function
Gray/White	Chip Select
White/Gray	SPI MOSI
White/Brown	+5 VDC
Brown/White	SPI MISO
White/Green	SPI Clock
Green/White	Comm Gnd
White/Orange	Enable
Orange/White	Direction
White/Blue	Opto Ref
Blue/White	Step Clock
Black	Power Gnd
Red	+V
Uninsulated	Drain Wire

Figure 4.4 Prototype development cable PD12-1434-FL3

4.8.1 P2 — 19-pin M23 circular connector MD-CS10x-000

The MD-CS10x-000 prototype development cordset is used to rapidly interface the MDrive to the users power, communications and logic interface. This 13' (4.0 m) cable consists of a 119-pin M23 circular connector to plug directly into the MDrive P1 connector with ying leads on the opposite end to interface to power, communications and logic.

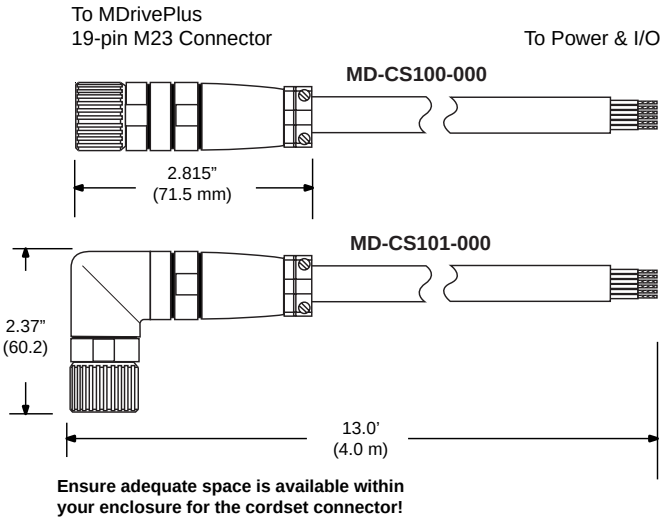

Wire Colors	Function
Violet	Opto Ref.
Red	Enable
Blue	+V*
White/Green	MOSI
White/Yellow	CS
White/Gray	+5 VDC
Black	Comm GND
Green/Yellow	Shell
Yellow/Brown	Direction
Yellow	SPI Clock
Pink	MISO
Gray/Brown	Step Clock
Brown	Power GND*
Optional internal encoder	
Gray	Index +
Red/blue	Channel B +
Green	Channel B -
Gray/pink	Channel A -
Brown/green	Index -
White	Channel A +

Figure 4.5 MD-CS10x-000 prototype development cordset

4.8.3 P4 — 10-pin wire crimp ED-CABLE-6

The ED-CABLE-JST10 prototype development cable is used to rapidly interface the MDrive optional encoder interface to the users controller. This 10' (3.0 m) cable consists of a 10-pin locking wire crimp connector to plug directly into the MDrive optional P4 connector with ying leads on the opposite end to interface a control device.

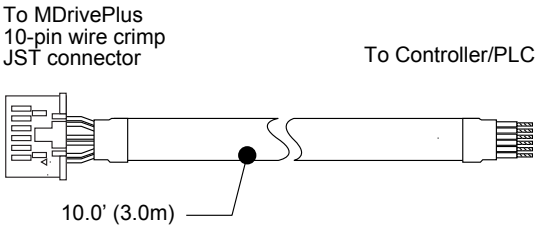

Pair	Wire Colors	Function
1	White/Blue	IDX+
	Blue/White	IDX-
2	White/Orange	CH B+
	Orange/White	CH B-
3	White/Green	CH A+
	Green/White	CH A-
4	White/Brown	Ground
	Brown/White	N/C

Figure 4.6 Encoder interface cable ED-CABLE-JST10

4.9 Mating connector kits

Use to build your own cables. Kit contains 5 mating shells with pins. Cable not supplied. Manufacturer's crimp tool recommended.

Mates to connector:

P2 10-pin IDC CK-01

P1 12-pin wire crimp CK-03

P4 10-pin wire crimp (encoder) CK-13

Page intentionally left blank

MDrive® 23
Microstepping

CE RoHS

1. Introduction
2. Speci cations
3. Mounting Recommendations
4. Interface and Connectivity

This page intentionally left blank

Table of Contents

1 Introduction 1-1
1.1 MDrive 23 unit overview 1-1
1.3 Product identi cation 1-2
1.4 Documentation reference 1-3
1.5 Product software 1-3

2 Speci cations 2-1
2.1 Mechanical speci cations 2-1
2.1.1 MDrive 23 mechanical speci cations 2-1
2.1.2 MDrive 23-65 mechanical speci cations 2-2
2.2 General speci cations 2-3
2.2.1 Electrical speci cations 2-3
3.2.2 Logic speci cations 2-3
3.2.3 Communications speci cations 2-3
3.2.4 Thermal speci cations 2-3
3.2.5 Motion speci cations 2-4
2.2.8 Motor speci cations 2-4
2.2.9 Speed-force performance curves 2-4
2.3 Connectivity speci cations/pin assignments - Communications 2-6
2.3.1 SPI communications - connector P2 2-6
2.4 Connectivity speci cations/pin assignments - power and logic 2-7
2.4.1 Power and logic (universal inputs) 2-7
2.4.2 Power and logic (differential inputs) 2-8
2.4.3 Power, logic and communications — 12-pin wire crimp (universal input) 2-9
2.4.4 Power, logic, communications and optional encoder — 19-pin M23 (universal input) 2-10
2.4.5 Power, logic and communications (differential input) 2-11
2.5 Connectivity speci cations/pin assignments - internal encoder 2-12
2.5 Options 2-13
2.6 Connectivity 2-13

3 Mounting and connection recommendations 3-1
3.1 Mounting 3-2
3.2 Layout and interface guidelines 3-3
3.2.1 Rules of wiring 3-3
3.2.2 Rules of shielding 3-3
3.3 Recommended wiring 3-4
3.3.1 Recommended mating connectors and pins 3-4
3.4 Securing power leads and logic leads 3-5

Revision R031910

4 Connection and interface 4-1
4.1 Interfacing communications..... 4-1
4.1.1 P2 - 10-pin IDC style connector..... 4-2
4.1.2 P1 - 12-pin wire crimp connector..... 4-2
4.1.3 P1 - 19-pin M23 circular connector..... 4-3
4.3 Interfacing DC power..... 4-3
4.2.1 Recommended power supply characteristics 4-4
4.2.2 Recommended wire gauge..... 4-4
4.3.3 P1 — 12’ (30.5 cm) ying leads interface..... 4-4
4.3.4 P1 — 7-pin pluggable terminal interface..... 4-4
4.3.5 P1 — 12-pin locking wire crimp interface 4-4
4.3.6 P1 — 19-pin M23 circular interface 4-5
4.3.7 Drive Protection Module DPM75 4-5
4.4 Interfacing Logic (universal input) 4-6
4.4.1 P1 — 12’ (30.5 cm) ying leads interface..... 4-6
4.4.2 P1 — 7-pin pluggable terminal interface..... 4-6
4.4.3 P1 — 12-pin locking wire crimp 4-6
4.4.3 P1 — 19-pin M23 circular connector 4-7
4.5 Interfacing Logic (differential inputs) 4-7
4.5.1 P1 — 12’ (30.5 cm) ying leads interface..... 4-7
4.5.2 P1 — 7-pin pluggable terminal interface..... 4-8
4.5.3 P1 — 12-pin locking wire crimp 4-8
4.6 Encoder interface 4-9
4.6.1 P4 — 10-pin wire crimp 4-9
4.6.3 P1 — 19-pin M23 circular connector 4-9
4.7 USB to SPI communications converters 4-10
4.7.1 USB to 10-pin IDC — MD-CC300-001 4-10
4.7.2 USB to 12-pin wire crimp — MD-CC303-001 .. 4-10
4.7.3 USB to 19-pin M23 circular — MD-CC301-001..... 4-11
4.8 Prototype development cables..... 4-12
4.8.1 P1 — 12-pin locking wire crimp PD12-1434-FL3 4-12
4.8.1 P2 — 19-pin M23 circular connector MD-CS10x-000..... 4-12
4.8.3 P4 — 10-pin wire crimp ED-CABLE-6 4-13
4.9 Mating connector kits 4-13

List of Figures

Figure 1.1 Standard product options 1-2
Figure 2.1 MDrive 23 Mechanical Speci cations 2-1
Figure 2.2 MDrive 23-65 Mechanical Speci cations 2-2
Figure 2.3 Single length motor 2-4
Figure 2.4 Double length motor 2-5
Figure 2.5 Triple length motor 2-5
Figure 2.6 Quad length motor 2-5
Figure 3.1 MDrive 23 Microstepping mounting and drill pattern 3-2
Figure 3.2 Securing leads 3-5
Figure 4.1 DPM75 Drive Protection Module 4-5
Figure 4.2 MD-CC300-001 communications converter cable 4-10
Figure 4.3 MD-CC303-001 communications converter cable 4-10
Figure 4.4 MD-CC301-001 communications converter 4-11
Figure 4.5 Prototype development cable PD12-1434-FL3 4-12
Figure 4.6 MD-CS10x-000 prototype development cordset 4-12
Figure 4.7 Encoder interface cable ED-CABLE-JST10 4-13

Revision R031910

List of Tables

Table 2.1 Electrical speci cations 2-3
Table 2.2 I/O speci cations 2-3
Table 2.3 Communications speci cations 2-3
Table 2.4 Thermal speci cations 2-3
Table 2.5 Motion speci cations 2-4
Table 2.6 Microstepping motor speci cations 2-4
Table 2.7 P2 communications, 10-pin IDC 2-6
Table 2.8 Power and logic interface - 12” (308.8.mm) ying leads 2-7
Table 2.9 Power and logic interface - 7-pin pluggable terminal 2-7
Table 2.10 Power and logic interface - 12” (308.8.mm) ying leads 2-8
Table 2.11 Power and logic interface - 7-pin pluggable terminal 2-8
Table 2.12 P1 Power, logic and communications 2-9
Table 2.13 P1 Power, logic, communications and optional encoder 2-10
Table 2.14 P1 Power, logic and communications 2-11
Table 2.15 P1 Power, logic and communications 2-12
Table 4.1 Communications connections, P2 - 10-pin IDC 4-2
Table 4.2 Communications connections, 12-pin locking wire crimp 4-2
Table 4.3 SPI communications, 19-pin M23 circular 4-3
Table 4.4 Recommended power supply characteristics 4-4
Table 4.5 Recommended power supply wire gauge 4-4
Table 4.6 Power and ground connections, ying leads 4-4
Table 4.7 Power and ground connections, 7-pin terminal 4-4
Table 4.8 Power and ground connections, 12-pin locking wire crimp 4-4
Table 4.9 Power and ground connections, 12-pin locking wire crimp 4-5
Table 4.10 Universal input connections, ying leads 4-6
Table 4.11 Universal input connections, 7-pin terminal 4-6
Table 4.12 Universal input connections, 12-pin locking wire crimp 4-6
Table 4.13 Universal input connections, 12-pin locking wire crimp 4-7
Table 4.14 Differential input connections, ying leads interface 4-7
Table 4.15 Differential input connections, 7-pin terminal 4-8
Table 4.16 Differential input connections, 12-pin locking wire crimp 4-8
Table 4.17 P4 - Encoder interface 4-9
Table 4.18 Encoder interface - 19-pin M23 circular connector 4-9

1 Introduction

The MDrive® 23 Microstepping high torque integrated motor and step and direction driver is ideal for designers who want the simplicity of a motor with on-board electronics. The integrated electronics of the MDrive 23 eliminate the need to run motor cabling through the machine, reducing the potential for problems due to electrical noise.

1.1 MDrive 23 unit overview

The unsurpassed smoothness and performance delivered by the MDrive 23 Microstepping are achieved through advanced 2nd generation current control. By applying innovative techniques to control current ow through the motor, resonance is signi cantly dampened over the entire speed range and audible noise is reduced.

The MDrive 23 accepts a broad input voltage range from +12 to +75 VDC, delivering enhanced performance and speed. Oversized input capacitors are used to minimize power line surges, reducing problems that can occur with long runs and multiple drive systems. An extended operating range of –40° to +85°C provides long life, trouble free service in demanding environments.

The MDrive 23 uses a NEMA 23 frame size high torque brushless step motor integrated with a microstepping driver, and accepts up to 20 resolution settings from full to 256 microsteps per full step, including: degrees, metric and arc minutes. These settings may be changed on-the- y or downloaded and stored in nonvolatile memory with the use of a simple GUI which is provided. This eliminates the need for external switches or resistors. Parameters are changed via an SPI port.

For use in environments where exposure to chemical, dust and liquids may occur, a sealed MDrive 23-65 Microstepping unit with 19-pin M23 circular connector meets IP65 speci cations.1

The versatile MDrive 23 Microstepping is available in multiple con gurations to t various system needs. Rotary motor versions come in three lengths and may include an encoder, control knob or planetary gearbox. Long life Acme screw linear actuators are also available.

Numerous connector styles give you choices for the best t and features. Select from 12.0” (30.5cm) ying leads, pluggable terminal strip, locking wire crimp connectors1, and M23 circular connectors on IP65 sealed versions1.

MDrive connectivity has never been easier with options ranging from all-inclusive QuickStart Kits to individual interfacing cables and mating connector kits to build your own cables.

The MDrive 23 is a compact, powerful and cost effective motion control solution that will reduce system cost, design and assembly time for a large range of brushless step motor applications.

Revision R031910

1.3 Product identi cation



Plus
base version

K MDM ☐ ☐ S ☐ 23 ☐☐ – OPTION

QuickStart Kit
details above

Input Version
1 = Universal
5 = Differential

Motor
A7 = Single Length (12–75 VDC) & Linear Actuator**
B7 = Double Length (12–75 VDC)
C7 = Triple Length (12–75 VDC)
D6 = Quad Length (12–60 VDC)

P1: I/O & Power
F = 12" Flying Leads
P = Pluggable Clamp Type Terminal Strip
C = 12-Pin Locking Wire Crimp (Includes I/O, Power & Comm)

P2: Communications
D = SPI with 10-Pin IDC Connector
Z = None. Used with 12-Pin Locking Wire Crimp in Position P1, which includes Communications.

Example #1: Part Number **MDM1PSD23A7** is an MDrive23Plus Microstepping with pluggable I/O & power interface, SPI communications with 10-pin IDC connector, and NEMA 23 single length motor.



Plus-65
IP65 sealed

K MDM2MSZ23 ☐☐ – OPTION

QuickStart Kit
details above

Motor
A7 = Single Length (12–75 VDC)
B7 = Double Length (12–75 VDC)
C7 = Triple Length (12–75 VDC)

P1: I/O, Power & Communications
19-Pin M23 Circular Connector

Example #2: Part Number **MDM2MSZ23B7** is an MDrive23Plus-65 Microstepping sealed with IP65 rating, 19-pin M23 I/O, power and communications circular connector, and NEMA 23 double length motor.

OPTIONS

External Encoder –E ☐

Refer to external encoder table above for line counts and part numbers.

Example: **MDM1PSD23A7–EHL** adds an external 500-line count differential optical encoder with index mark to example #1.
Not available with sealed –65 versions.

Internal Encoder –E ☐

Refer to internal encoder table above for line counts and part numbers.

Example: **MDM1PSD3A7–ECM** adds an internal 250-line count differential magnetic encoder with index mark to example #1.

Control Knob –N

Example: **MDM1PSD23A7–N a**dds a rear control knob for manual positioning to example #1.
Not available with sealed –65 versions.

Planetary Gearbox –G ☐☐☐ – F

Refer to gearbox page for complete table of ratios and part numbers.

Optional NEMA Flange

Example: **MDM1PSD23A7–G1A2** adds a 1-stage planetary gearbox with 5.18:1 ratio to example #1.
Add –F for optional NEMA flange.

Figure 1.1 Standard product options

1.4 Documentation reference

The following user's manuals are available for the MDrive 23:

- Product manual, describes the technical data, installation, con guration and programming of the product.
- Quick Reference, describes the basic wiring, connection and use of this product. The quick reference is shipped in printed form with the product.

This documentation is also available for download from the IMS web site at http://www.imshome.com

1.5 Product software

The MDrive 23 microstepping integrated motor and driver is con gured using the IMS SPI motor interface graphical user interface. This free software may be downloaded from http://www.imshome.com/software_interfaces.html.

Installation and usages instructions are to be found in Part 1 of this document, Section 5.

This page has been intentionally left blank.

2 Speci cations

2.1 Mechanical speci cations

2.1.1 MDrive 23 mechanical speci cations

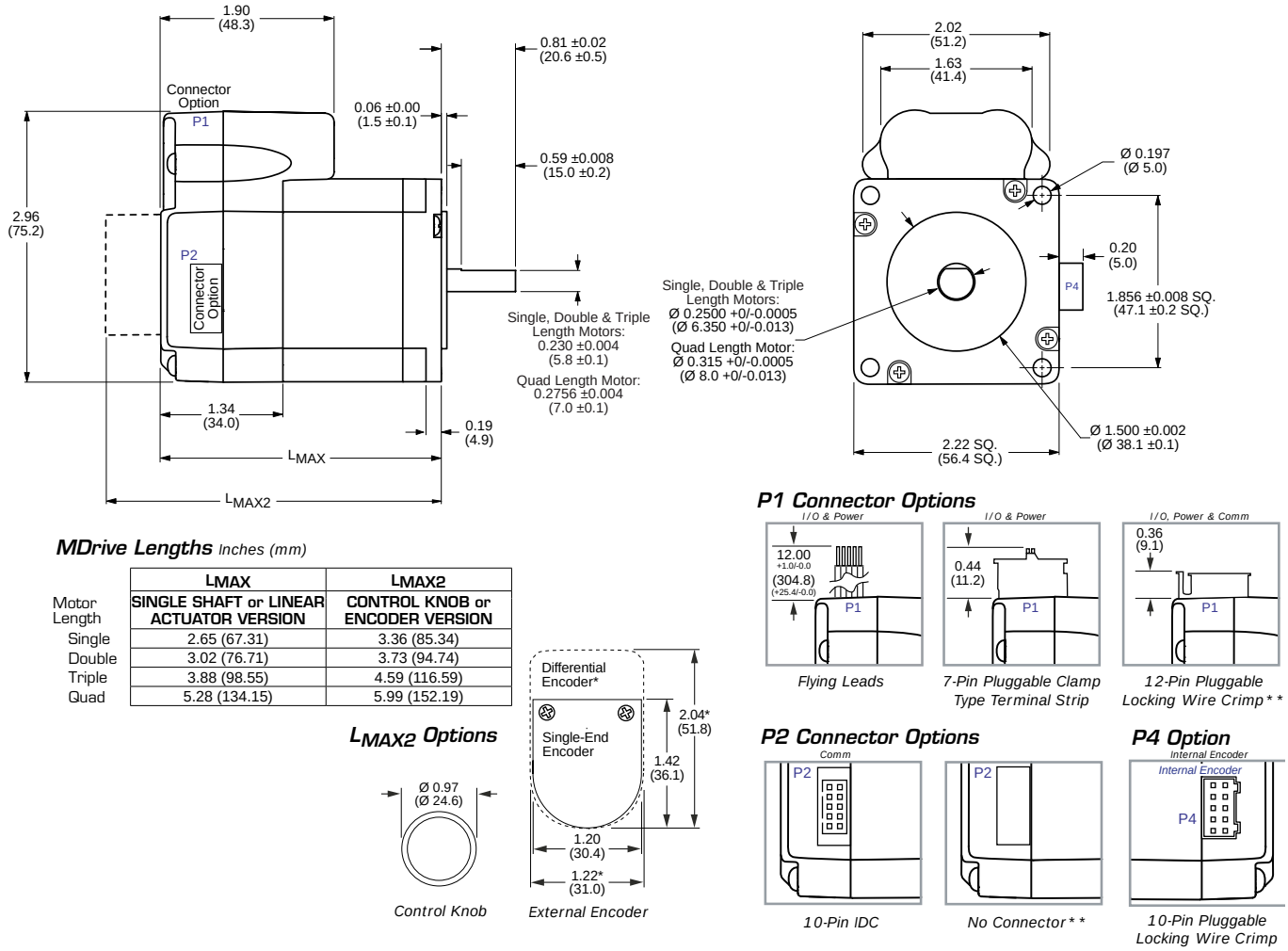

MDrive Lengths *Inches (mm)*

Motor Length	LMAX SINGLE SHAFT or LINEAR ACTUATOR VERSION	LMAX2 CONTROL KNOB or ENCODER VERSION
Single	2.65 (67.31)	3.36 (85.34)
Double	3.02 (76.71)	3.73 (94.74)
Triple	3.88 (98.55)	4.59 (116.59)
Quad	5.28 (134.15)	5.99 (152.19)

LMAX2 Options

Control Knob *External Encoder*

P1 Connector Options

Flying Leads *7-Pin Pluggable Clamp Type Terminal Strip* *12-Pin Pluggable Locking Wire Crimp***

P2 Connector Options ***P4 Option***

10-Pin IDC *No Connector*** *10-Pin Pluggable Locking Wire Crimp*

***12-Pin Pluggable Locking Wire Crimp connector at P1 eliminates the P2 connecto*

Figure 2.1 MDrive 23 Mechanical Speci cations

2.1.2 MDrive 23-65 mechanical speci cations

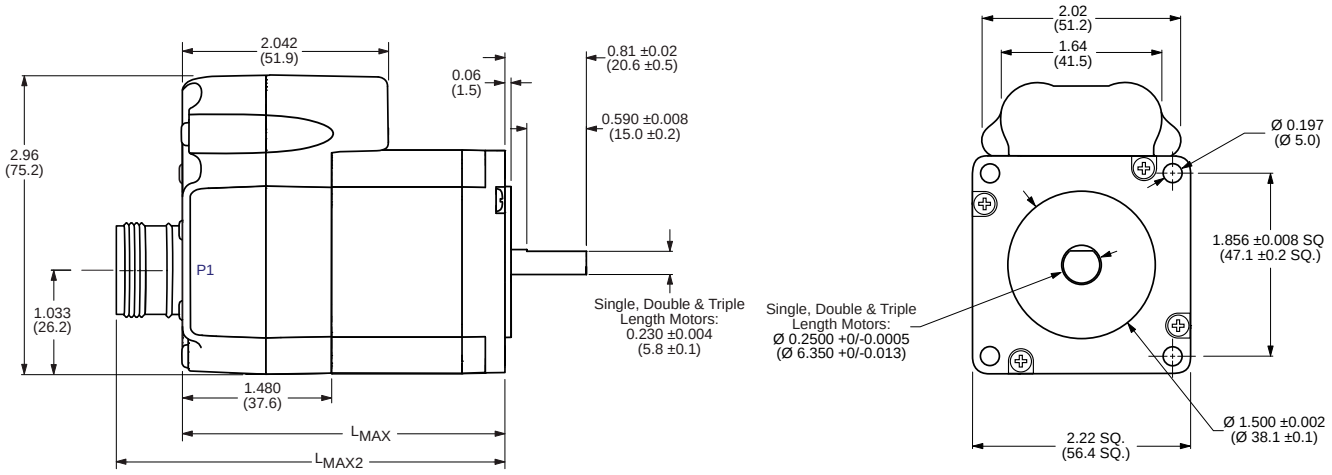

Sealed MDrive Lengths *Inches (mm)*

Motor Length	LMAX	LMAX2
Single	2.82 (71.63)	3.48 (88.39)
Double	3.16 (80.26)	3.82 (97.03)
Triple	4.02 (102.11)	4.67 (118.62)

Connector

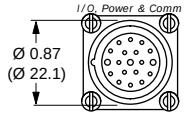

19-Pin M23 (Male)

Figure 2.2 MDrive 23-65 Mechanical Speci cations

2.2 General speci cations

2.2.1 Electrical speci cations

	Condition	Min	Typ	Max	Unit
Input voltage range	Single, double and triple lengthe motors	+12	—	+75	VDC
	Quad length motor	+12		+60	
Max power supply current*	Single, double and triple length motors			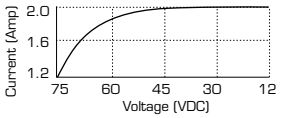	
	Quad length ,motor			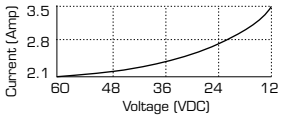	

**per MDrive 23, Actual current depends on voltage and load.*

Table 2.1 Electrical speci cations

3.2.2 Logic speci cations

	Condition	Min	Typ	Max	Unit
Universal Inputs					
Isolated input voltage range (sourcing or sinking)	Isolated inputs	+5	—	+24	VDC
Current	+5 VDC max	—	—	8.7	mA
Current	+24 VDC max	—	—	14.6	mA
Differential Inputs					
Voltage range	—	0	—	+5	VDC
High level input voltage	—	+3.75	—	+5.75	VDC
Low level input voltage	—	—	—	≤+1.2	VDC

Table 2.2 I/O speci cations

3.2.3 Communications speci cations

Protocol	SPI

Table 2.3 Communications speci cations

3.2.4 Thermal speci cations

		Min	Typ	Max	Unit
Heat sink temperature	non-condensing humidity	-40	—	+85	ºC
Motor temperature	non-condensing humidity	-40	—	+100	ºC

Table 2.4 Thermal speci cations

3.2.5 Motion speci cations

Number of microstep resolutions	20

Available microsteps per revolution

200	400	800	1000	1600	2000	3200	5000	6400	10000
12800	20000	25000	25600	40000	50000	51200	36000[1]	21600[2]	25400[3]

1=0.01 deg/µstep 2=1 arc minute/µstep *3=0.001 mm/µstep
** 1" per revolution lead screw*

Digital filter range	50 ns to 12.9 µs (10 MHz to 38.8 kHz)
Clock types	step/direction, up/down, quadrature
Step frequency (max)	5 MHz
Step frequency minimum pulse width	100 ns

Table 2.5 Motion speci cations

2.2.8 Motor speci cations

Specification	Single length	Double length	Triple length	Quad length
Holding torque oz-in (N-cm)	90.0 (64)	144 (102)	239 (169)	283 (200)
Detent torque oz-in (N-cm)	3.9 (2.7)	5.6 (3.92)	9.7 (6.86)	14.2 (10.0)
Rotor inertia oz-in-sec^2 (kg-cm^2)	0.0025 (0.18)	0.0037 (0.26)	0.0065 (0.46)	0.0108 (0.76)
Weight motor and driver oz (g)	21.6 (612.3)	26.4 (784.4)	39.2 (1111.3)	61.6 (1746.3)

Table 2.6 Microstepping motor speci cations

2.2.9 Speed-force performance curves

Single length motor

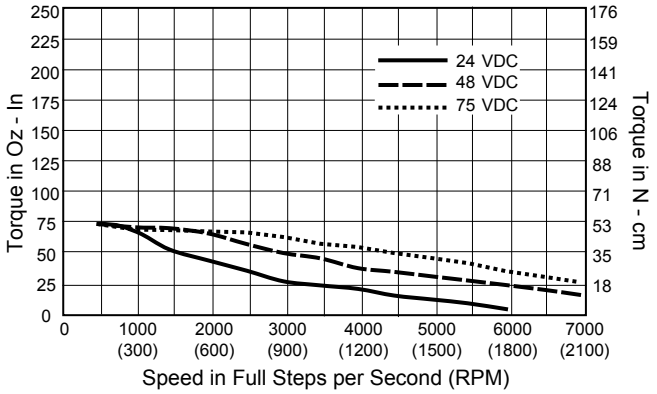

Figure 2.3 Single length motor

Double length motor

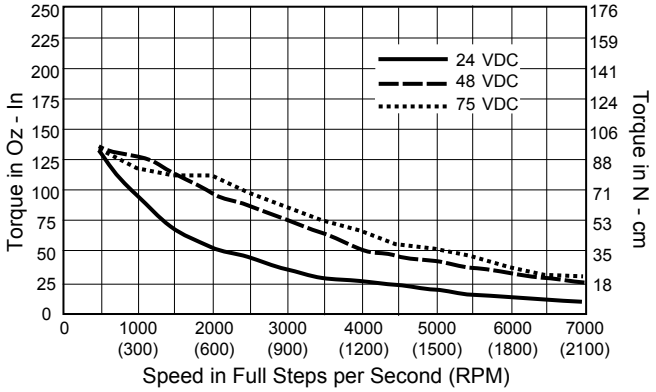

Figure 2.4 Double length motor

Triple length motor

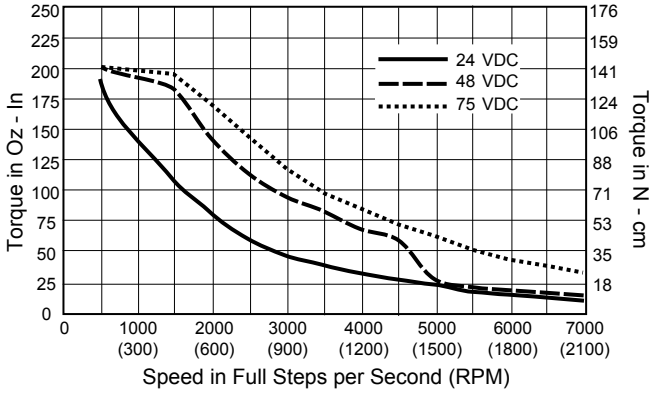

Figure 2.5 Triple length motor

Quad length motor

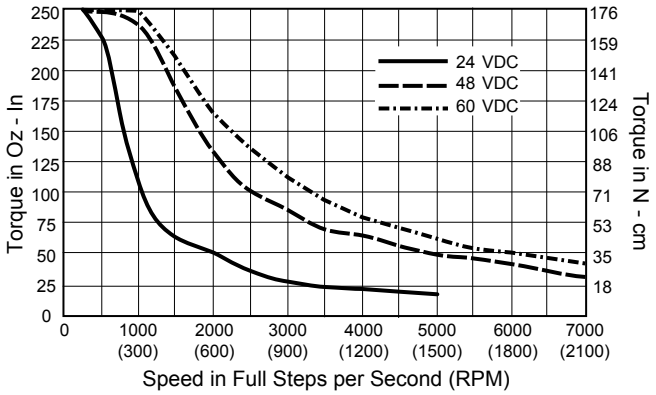

Figure 2.6 Quad length motor

2.3 Connectivity speci cations/pin assignments - Communications

2.3.1 SPI communications - connector P2

⚠ CAUTION

+5VDC OUTPUT

The +5 VDC output on connector P2 is for the express purpose of powering the IMS isolated communications converter cables. Do not use to power external devices.

Failure to follow these instructions may result in damage to system components!

If using the model MDrive with the 12-pin locking wire crimp or M23 circular connector at connector position P1, the P2 connector is eliminated and SPI communications are bundled with power and logic.

10-pin fIDC style connector

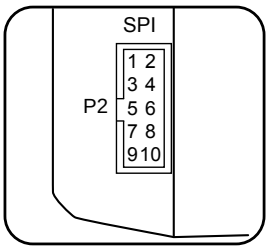

Connectivity Options
USB to SPI Converter:
MD-CC300-001

Mating connector kit:
CK-01 (ribbon cable not included)

Mfg P/N:
Shell
SAMTEC TSD-05-01-N

Ribbon cable
Tyco: 1-57051-9

Pin #	Function	Description
1	N/C	Not connected
2	N/C	Not connected
3	N/C	Not connected
4	CS	SPI chip select, selected when low.
5	GND	Communications ground
6	+5V	+ 5 VDC output. Used to power the IMS communications converter ONLY! Not for general purpose use.
7	MOSI	SPI master out - slave in
8	CLK	SPI clock
9	N/C	Not connected
10	MISO	SPI master in - slave out

Table 2.7 P2 communications, 10-pin IDC

2.4 Connectivity speci cations/pin assignments - power and logic

2.4.1 Power and logic (universal inputs)

12” (304.8 mm) flying leads

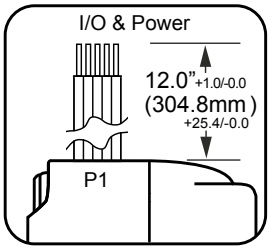

Wire Color	Function	Description
White	Opto	Optocoupler reference
Orange	Step clock	Step clock input
Blue	Direction	CW/CCW direction input
Brown	Enable	Output bridge enable input
Black	GND	Power ground
Red	+V	+12 to +75 VDC motor power

Table 2.8 Power and logic interface - 12” (308.8.mm) ying leads

7-pin pluggable terminal

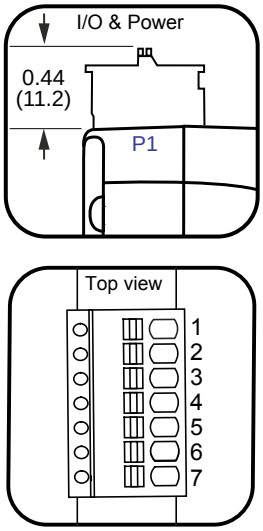

Pin #	Function	Description
1	Opto	Optocoupler reference
2	N/C	Not connected
3	Step clock	Step clock input
4	Direction	CW/CCW direction input
5	Enable	Output bridge enable input
6	GND	Power ground
7	+V	+12 to +75 VDC motor power

Table 2.9 Power and logic interface - 7-pin pluggable terminal

2.4.2 Power and logic (differential inputs)

⚠ CAUTION

ELECTRICAL OVERSTRESS

The universal logic inputs are tolerant to +24 VDC. The differential input version inputs are TTL level and only tolerent to +5 VDC:

Do not exceed +5 VDC on the differential inputs.

Failure to follow these instructions can result in equipment damage.

12" (304.8 mm) flying leads

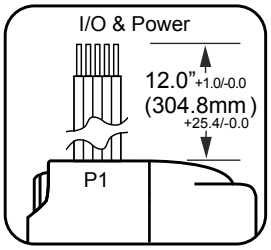

Wire Color	Function	Description
White	CW +	Clockwise plus input
Orange	CW -	Clockwise minus input
Blue	CCW -	Counter-clockwise minus input
Brown	CCW +	Counter-clockwise plus input
Black	GND	Power ground
Red	+V	+12 to +75 VDC motor power

Table 2.10 Power and logic interface - 12" (308.8.mm) ying leads

7-pin pluggable terminal

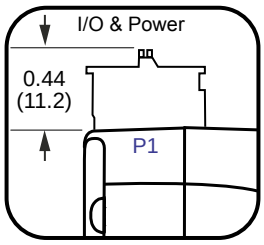

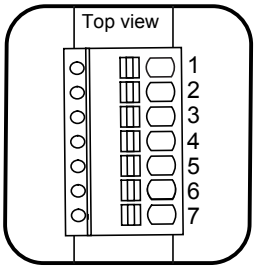

Pin #	Function	Description
1	CW +	Clockwise plus input
2	N/C	Not connected
3	CW -	Clockwise minus input
4	CCW -	Counter-clockwise minus input
5	CCW +	Counter-clockwise plus input
6	GND	Power ground
7	+V	Motor power

Table 2.11 Power and logic interface - 7-pin pluggable terminal

2.4.3 Power, logic and communications — 12-pin wire crimp (universal input)

⚠ CAUTION

CONNECTOR PRODUCT ALERT!

The manufacturer of the Tyco 12-pin connector has begun marking the connector shell, PN 1-794617-2. with pin numbers as shown in the diagram on the right.

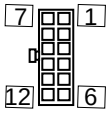

Disregard these markinings

Disregard these pin number markings. Use the pin numbering scheme as shown below.

Failure to follow these instructions can result in equipment damage.

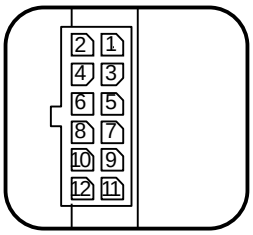

Connectivity Options
USB to SPI Converter:
MD-CC303-001

Prototype development cable:
PD12-1434-FL3

Mating connector kit:
CK-03

Mfg P/N:
Shell
Tyco: 1-794617-2

Pins
Tyco: 794610-1

Pin #	Function	Description
1	GND	Motor power supply return (ground)
2	+V	+12 to +75 VDC motor power
3	OPTO	Optocoupler power supply input
4	SCLK	Step Clock input
5	EN	The Enable Input can be used to enable or disable the driver output circuitry.
6	DIR	The direction Input controls the clockwise/ counterclockwise direction of the motor. It may be configured as sinking or sourcing depending on the state of the Optocoupler Reference.
7	+5 VDC	+5 VDC output. This output is only to be used to power the optional communications converter cable MD-CC305-001. Do not use to power external devices.
8	CLK	SPI Clock
9	CGND	Communications ground
10	MOSI	SPI Master In - Slave Out
11	CS	SPI Chip Select input
12	MISO	SPI Master In - Slave Out

Table 2.12 P1 Power, logic and communications

2.4.4 Power, logic, communications and optional encoder — 19-pin M23 (universal input)

Outside: Pins 1 -12

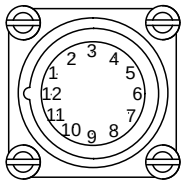

Inside: Pins 13 -19

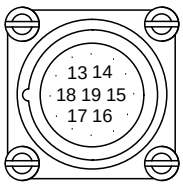

Connectivity Options
USB to SPI Converter:
MD-CC301-001

Prototype development cable:
MD-CS100-000 (straight)
MD-CS101-000 (right-angle)

Pin #	Function	Description
1	Opto Reference	The signal applied to the optocoupler reference will determine the sinking/ or sourcing configuration of the inputs. To set the inputs for sinking operation, a +5 to +24 VDC supply is connected. If sourcing, the reference is connected to ground
2	Enable	Enable/disable input will enable or disable the driver output to the motor. In the disconnected state the driver outputs are enabled in either sinking or sourcing configuration. Can be configured as active high or active low.
3	IDX+	Encoder index + output.
4	CH B+	Encoder channel B+ output.
5	CH B-	Encoder channel B- output.
6	+V	+12 to +75 VDC motor power
7	CH A+	Encoder channel A+ output.
8	MOSI	Master-out/slave-in. Carries output data from the SPI Master to the MDO.
9	CS	SPI chip select. This signal is used to turn communications on multiple MDM units on or off.
10	+5 VDC Output	Supply voltage for the MD-CC301-000 Converter Cable ONLY!
11	GND	Communications ground.
12	Connector Shell	Connector shell,
13	Direction/ Channel B/ Clock Down	Direction input. The axis direction will be with respect to the state of the direction override parameter. It may also receive quadrature and clock up type inputs if so configured.
14	IDX-	Encoder index - output
15	CH A-	Encoder channel A - output
16	SPI Clock	The clock is driven by the SPI Master. The clock cycles once for each data bit.
17	MISO	Master-in/slave-out. Carries output data from the MDM back to the SPI Master.
18	Step Clock/ Channel A/ Clock Up	Step clock input. The step clock input will receive the clock pulses which will step the motor 1 step for each pulse. It may also receive quadrature and clock up type inputs if so configured.
19	GND	Power ground

Table 2.13 P1 Power, logic, communications and optional encoder

2.4.5 Power, logic and communications (differential input)

⚠ CAUTION

ELECTRICAL OVERSTRESS

The universal logic inputs are tolerant to +24 VDC. The differential input version inputs are TTL level and only tolerent to +5 VDC:

Do not exceed +5 VDC on the differential inputs.

Failure to follow these instructions can result in equipment damage.

⚠ CAUTION

CONNECTOR PRODUCT ALERT!

The manufacturer of the Tyco 12-pin connector has begun marking the connector shell, PN 1-794617-2. with pin numbers as shown in the diagram on the right.

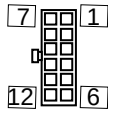

Disregard these markinings

Disregard these pin number markings. Use the pin numbering scheme as shown below.

Failure to follow these instructions can result in equipment damage.

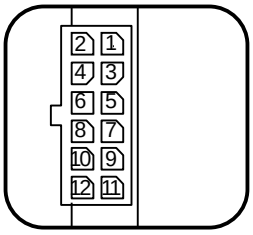

Connectivity Options
USB to SPI Converter:
MD-CC303-001

Prototype development cable:
PD12-1434-FL3

Mating connector kit:
CK-03

Mfg P/N:
Shell
Tyco: 1-794617-2

Pins
Tyco: 794610-1

Pin #	Function	Description
1	GND	Motor power supply return (ground)
2	+V	+12 to +75 VDC motor power
3	CW+	Positive clockwise input
4	CW-	Negative clockwise input
5	CCW+	Positive counter-clockwise input
6	CCW-	Negative counter-clockwise input
7	+5 VDC	+5 VDC output. This output is only to be used to power the optional communications converter cable MD-CC303-001. Do not use to power external devices.
8	CLK	SPI Clock
9	CGND	Communications ground
10	MOSI	SPI Master In - Slave Out
11	CS	SPI Chip Select input
12	MISO	SPI Master In - Slave Out

Table 2.14 P1 Power, logic and communications

2.5 Connectivity speci cations/pin assignments - internal encoder

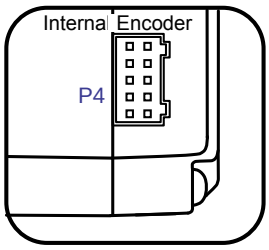

Pin #	Function	Description
1	GND	Encoder ground
2	CH A+	Channel A positive input
3	CH A-	Channel A negative input
4	CH B+	Channel B positive input
5	CH B-	Channel B negative input
6	IDX+	Index mark positive input
7	IDX-	Index mark negative input
8	N/C	Not connected
9	N/C	Not connected
10	N/C	Not connected

Table 2.15 P1 Power, logic and communications

2.5 Options

Drive Protection Module

The function of the DPM75 Drive Protection Module is to limit the surge current and voltage to a safe level when DC input power is switched on and off to the MDrive.

Internal encoder

Internal differential magnetic encoders with index mark are available with the MDrive Microstepping.

Line counts available: 100, 200, 250, 256, 400, 500, 512, 800, 1000

2.6 Connectivity

QuickStart kit

For rapid design veri cation, all-inclusive QuickStart Kits have communication converter, prototype development cable(s), instructions and CD for MDrive Microstepping initial functional setup and system testing.

Communication Converters

Electrically isolated, in-line converters pre-wired with mating connectors to conveniently set/program communication parameters for a single MDrive product via a PC's USB port. Length 12.0' (3.6m).

Mates to connector:

P2 10-pin IDC MD-CC300-001

P1 12 pin locking wire crimp MD-CC303-001

P1 19-pin M23 circular MD-CC301-001

Prototype Development Cables

Speed test/development with pre-wired mating connectors that have y-ing leads other end. Length 10.0' (3.0m).

Mates to connector:

P1 12-pin locking wire crimp PD12-1434-FL3

P4 10-pin wire crimp (encoder) ED-CABLE-JST10

P1 19-pin M23 circular (straight) MD-CS100-000

P1 19-pin M23 circular (right-angle) MD-CS101-000

Mating Connector Kits

Use to build your own cables. Kit contains 5 mating shells with pins. Cable not supplied. Manufacturer's crimp tool recommended.

Mates to connector:

P2 10-pin IDC CK-01

P1 12-pin wire crimp CK-03

P4 10-pin wire crimp CK-13

Page intentionally left blank

3 Mounting and connection recommendations

⚠ DANGER

EXPOSED SIGNALS

Hazardous voltage levels may be present if using an open frame power supply to power the product.

Failure to follow these instructions will result in death or serious injury.

⚠ CAUTION

SWITCHING DC POWER/HOT PLUGGING

Do not connect or disconnect power, logic, or communications while the device is in a powered state.

Remove DC power by powering down at the AC side of the DC power supply.

Failure to follow these instructions can result in equipment damage.

⚠ CAUTION

LEAD RESTRAINT

Some MDrive mounting con gurations require that the MDrive move along the screw. Ensure that all cabling is properly re-strained to provide strain relief on connection points..

Failure to follow these instructions can result in equipment damage.

⚠ CAUTION

THERMAL MANAGEMENT

The mounting plate material should offer suf cient mass and thermal conductivity to ensure that the motor temperature does not eceed 100°C.

Failure to follow these instructions can result in equipment damage.

Revision R031910

3.1 Mounting

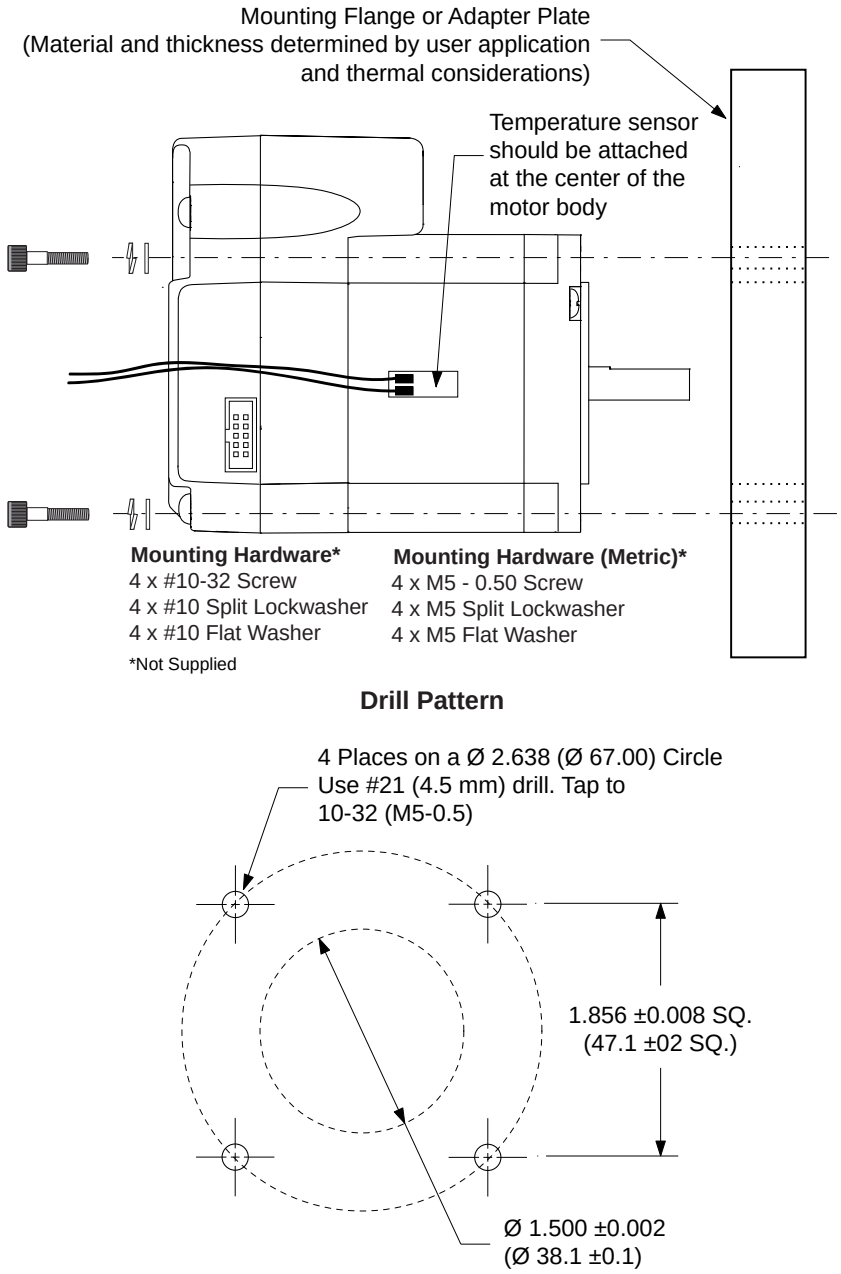

Figure 3.1 MDrive 23 Microstepping mounting and drill pattern

3.2 Layout and interface guidelines

Logic level cables must not run parallel to power cables. Power cables will introduce noise into the logic level cables and make your system unreliable.

Logic level cables must be shielded to reduce the chance of EMI induced noise. The shield needs to be grounded at the signal source to earth. The other end of the shield must not be tied to anything, but allowed to oat. This allows the shield to act as a drain.

Power supply leads to the MDrive 23 need to be twisted. If more than one driver is to be connected to the same power supply, run separate power and ground leads from the supply to each driver.

3.2.1 Rules of wiring

- Power Supply and Motor wiring should be shielded twisted pairs, and run separately from signal-carrying wires.
- A minimum of one twist per inch is recommended.
- Motor wiring should be shielded twisted pairs using 20 gauge, or for distances of more than 5 feet, 18 gauge or better.
- Power ground return should be as short as possible to established ground.
- Power supply wiring should be shielded twisted pairs of 18 gauge for less than 4 amps DC and 16 gauge for more than 4 amps DC.

3.2.2 Rules of shielding

- The shield must be tied to zero-signal reference potential. It is necessary that the signal be earthed or grounded, for the shield to become earthed or grounded. Earthing or grounding the shield is not effective if the signal is not earthed or grounded.
- •Do not assume that Earth ground is a true Earth ground. Depending on the distance from the main power cabinet, it may be necessary to sink a ground rod at the critical location.
- The shield must be connected so that shield currents drain to signal-earth connections.
- The number of separate shields required in a system is equal to the number of independent signals being processed plus one for each power entrance.
- The shield should be tied to a single point to prevent ground loops.
- A second shield can be used over the primary shield; however, the second shield is tied to ground at both ends.

Revision R031910

3.3 Recommended wiring

The following wiring/cabling is recommended for use with the MDrive 23:

Logic Wiring..... 22 AWG

Wire Strip Length..... 0.25" (6.0 mm)

Power and Ground ..... 20 AWG

3.3.1 Recommended mating connectors and pins

Communications

10-pin IDC (P2)..... SAMTEC TCSD-05-01-N

Recommended ribbon cable..... Tyco 1-57051-9

Logic and Power

The following mating connectors are recommended for the MDrive

12-pin Locking Wire Crimp Connector Shell..... Tyco 1-794617-2

Crimp Pins..... Tyco 794610-1

3.4 Securing power leads and logic leads

Some applications may require that the MDrive move with the axis motion. If this is a requirement of your application, the motor leads (ying, pluggable or threaded) must be properly anchored. This will prevent exing and tugging which can cause damage at critical connection points within the MDrive.

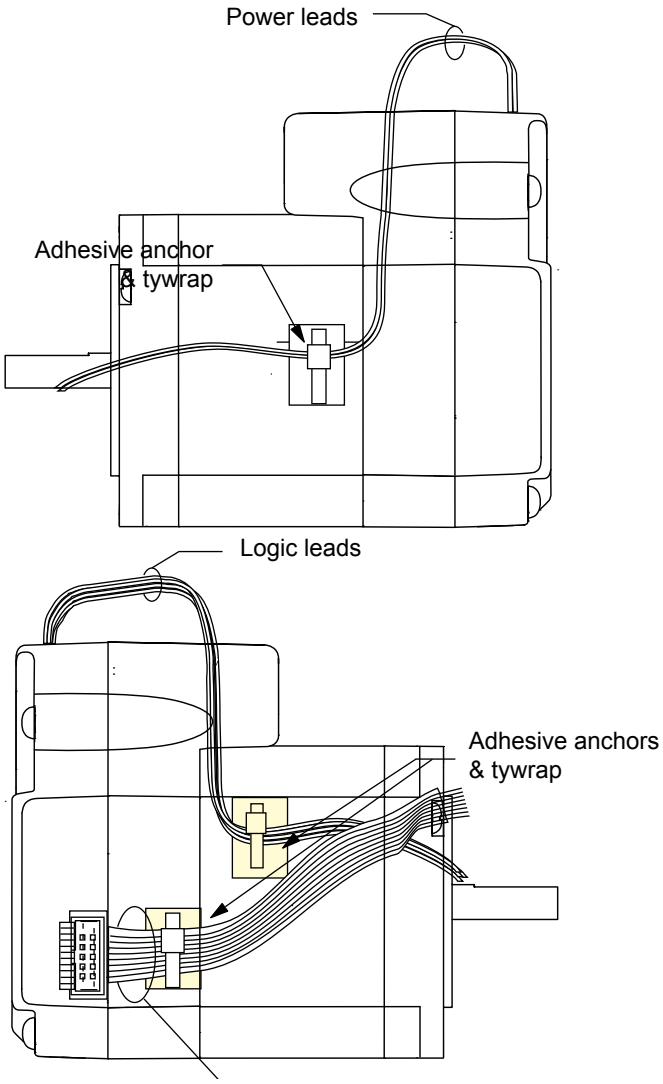

Figure 3.2 Securing leads

This page intentionally left blank

4 Connection and interface

⚠ DANGER

EXPOSED SIGNALS

Hazardous voltage levels may be present if using an open frame power supply to power the product.

Failure to follow these instructions will result in death or serious injury.

⚠ CAUTION

SWITCHING DC POWER/HOT PLUGGING

Do not connect or disconnect power, logic, or communications while the device is in a powered state.

Remove DC power by powering down at the AC side of the DC power supply.

Failure to follow these instructions can result in equipment damage.

⚠ CAUTION

CONNECTOR PRODUCT ALERT!

The manufacturer of the Tyco 12-pin connector has begun marking the connector shell, PN 1-794617-2. with pin numbers as shown in the diagram on the right.

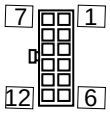

Disregard these markinings

Disregard these pin number markings. Use the pin numbering scheme as shown below.

Failure to follow these instructions can result in equipment damage.

4.1 Interfacing communications

SPI communications may be interfaced using one of two possible connector options:

1. 10-pin wire crimp connector at P2
2. 12-pin locking wire crimp connector at P1
3. 19-pin M23 circular connector at P1

If using the 12-pin locking wire crimp connector or M23 circular at P1, there will be no P2 connector. The P1 option will bundle power, logic and communications on a single connector.



For general SPI communications methods and practices please see Part 1, Section 5 of this document.

If using the model MDrive with the 12-pin locking wire crimp connector at connector position P1, the P2 connector is eliminated and SPI communications are bundled with power and logic.

4.1.1 P2 - 10-pin IDC style connector

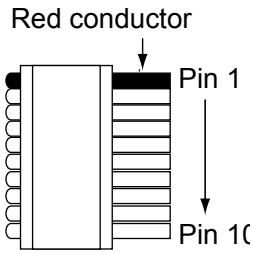

Pin #	Function	Description
1	N/C	Not connected
2	N/C	Not connected
3	N/C	Not connected
4	CS	SPI chip select, selected when low.
5	GND	Communications ground
6	+5V	+ 5 VDC output. Used to power the IMS communications converter ONLY! Not for general purpose use.
7	MOSI	SPI master out - slave in
8	CLK	SPI clock
9	N/C	Not connected
10	MISO	SPI master in - slave out

Table 4.1 Communications connections, P2 - 10-pin IDC

Connectivity accessories

Mating connector kit CK-01
(contains 5 connector shells, ribbon cable not included)

Communications converter cable (10'/3.0 m).....MD-CC300-001

Manufacturer (SAMTEC) part numbers

Connector shell.....TCSD-05-01-N

Ribbon cable.....Tyco 1-57051-9

4.1.2 P1 - 12-pin wire crimp connector

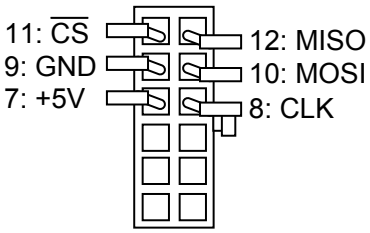

Pin #	*Signal*	*Wire colors*	
		MD-CC303-001	PD12-1434-FL3
7	+ 5 VDC output	—	White/brown
8	SPI clock	—	White/green
9	Comm ground	—	Green/white
10	SPI MOSI	—	White/gray
11	SPI chip select	—	Gray/white
12	SPI MISO	—	Brown/white

Table 4.2 Communications connections, 12-pin locking wire crimp

Connectivity accessories

Mating connector kit CK-03
(contains 5 connector shells and the appropriate quantity of pins to make 5 cables)

Prototype development cable (10'/3.0 m)..... PD12-1434-FL3

Manufacturer (Tyco) part numbers

Connector shell.....1-794617-2

Pins.....794610-1

4.1.3 P1 - 19-pin M23 circular connector

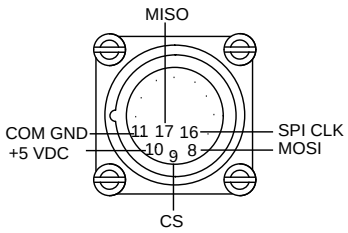

Pin #	*Signal*	*Wire colors*	
		MD-CC301-001	MD-CS10x-000
7	+ 5 VDC output	—	White/gray
8	SPI clock	—	Yellow
9	Comm ground	—	Black
10	SPI MOSI	—	White/green
11	SPI chip select	—	White/yellow
12	SPI MISO	—	Pink

Table 4.3 SPI communications, 19-pin M23 circular

A mating connector kit is not available for this connector. Shop for compatible connectors at:

- Lumberg
- Phoenix
- Turck
- RDE Connectors

4.3 Interfacing DC power

See part 1 of this document, section 3, for recommended power cable con gurations.

⚠ CAUTION

OVER VOLTAGE

The DC voltage range for the MDrive 23 is +12 to +75 VDC for single, double and triple length motors, +12 to +60 VDC for quad length motors. Ensure that motor back EMF is factored into your power supply size calculations.

Allow 3.0 A maximum power supply output current per MDrive 23 in the system. Actual power supply current will depend on voltage and load.

Failure to follow these instructions can result in equipment damage.

4.2.1 Recommended power supply characteristics

Voltage range	Single, double or triple length	+12 to +75 VDC
	Quad length	+12 to +60 VDC
Type		Unregulated linear
Ripple		± 5%
Output current	Single, double or triple length	2.0 A (per MDrive 23)
	Quad length	3.5 A (per MDrive 23)

Table 4.4 Recommended power supply characteristics

4.2.2 Recommended wire gauge

Cable Length: Feet (meters)	10 (3.0)	25 (7.6)	50 (15.2)	75 (22.9)	100 (30.5)
Amps Peak	**Minimum AWG**				
1 Amp Peak	20	20	18	18	18
2 Amps Peak	20	18	16	14	14
3 Amps Peak	18	16	14	12	12

Table 4.5 Recommended power supply wire gauge

4.3.3 P1 — 12’ (30.5 cm) ying leads interface

Wire Color	
Red	Motor power supply
Black	Power ground

Table 4.6 Power and ground connections, ying leads

4.3.4 P1 — 7-pin pluggable terminal interface

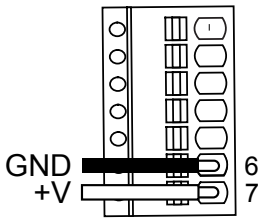

Pin #	
6	Power ground
7	Motor power supply

Table 4.7 Power and ground connections, 7-pin terminal

4.3.5 P1 — 12-pin locking wire crimp interface

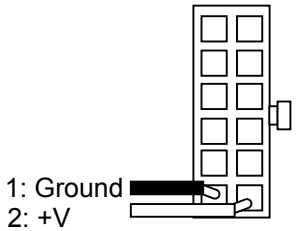

Pin #	***Signal***	***Wire colors***	
		MD-CC303-001	PD12-1434-FL3
2	Motor power supply	Red	Red
1	Power ground	Black	Black

Table 4.8 Power and ground connections, 12-pin locking wire crimp

Connectivity accessories

Mating connector kit CK-03
(contains 5 connector shells and the appropriate quantity of pins to make 5 cables)

Prototype development cable (10'/3.0 m)..... PD12-1434-FL3

Manufacturer (Tyco) part numbers

Connector shell.....1-794617-2

Pins.....794610-1

4.3.6 P1 — 19-pin M23 circular interface

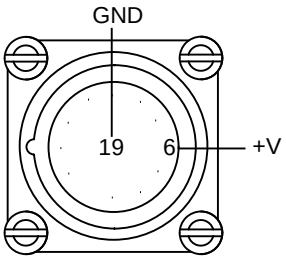

Pin #	*Signal*	*Wire colors*	
		MD-CC301-001	MD-CS10x-000
6	Motor power supply	Blue	Blue
19	Power ground	Brown	Brown

Table 4.9 Power and ground connections, 12-pin locking wire crimp

A mating connector kit is not available for this connector. Shop for compatible connectors at:

- Lumberg
- Phoenix
- Turck
- RDE Connectors

4.3.7 Power Interface using Drive Protection Module DPM75

The DPM75 Drive Protection Module will limit surge currents for up to two (2) MDrive 23 units at up to 75 VDC to allow switching DC Power.

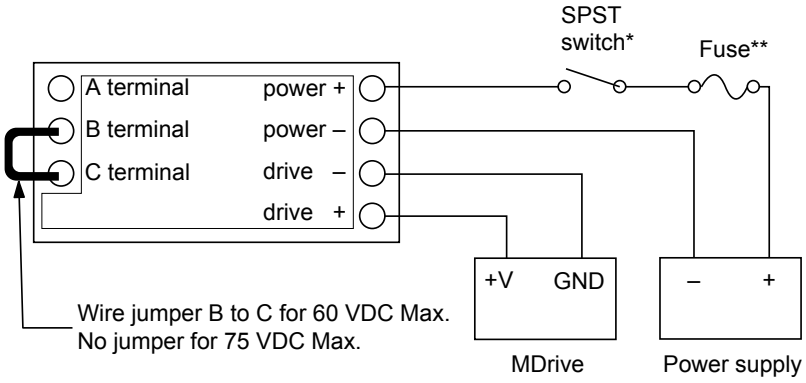

* Do not switch negative side of supply
**Fuse = 6.3 Amp slow blow (recommended: Bussman S505-6.3A or Littelfuse 215006.3). The fuse is optional.

Figure 4.1 DPM75 Drive Protection Module

4.4 Interfacing Logic (universal input)

See part 1 of this document, section 6, for logic interface con gurations and methods.

4.4.1 P1 — 12’ (30.5 cm) ying leads interface

Wire Color	*Signal*
White	Opto reference
Orange	CW/CCW direction input
Blue	Step clock input
Brown	Enable input

Table 4.10 Universal input connections, ying leads

4.4.2 P1 — 7-pin pluggable terminal interface

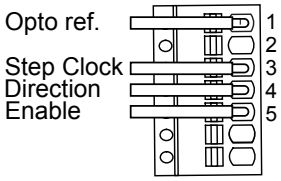

Pin #	*Signal*
1	Opto reference
3	CW/CCW direction input
4	Step clock input
5	Enable input

Table 4.11 Universal input connections, 7-pin terminal

4.4.3 P1 — 12-pin locking wire crimp

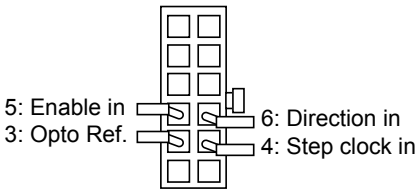

Pin #	*Signal*	*Wire colors*	
		MD-CC303-001	PD12-1434-FL3
3	Opto reference	White	White/blue
4	Step clock input	Green	Blue/white
5	Enable input	Orange	White/orange
6	Direction input	Blue	Orange/white

Table 4.12 Universal input connections, 12-pin locking wire crimp

Connectivity accessories

Mating connector kit CK-03
(contains 5 connector shells and the appropriate quantity of pins to make 5 cables)

Prototype development cable (10’/3.0 m)..... PD12-1434-FL3

Manufacturer (Tyco) part numbers

Connector shell.....1-794617-2

Pins.....794610-1

Revision R031910

4.4.3 P1 — 19-pin M23 circular connector

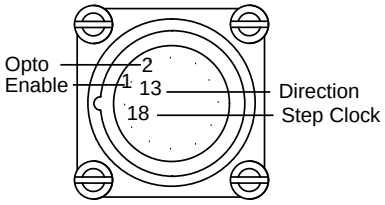

Pin #	*Signal*	*Wire colors*	
		MD-CC301-001	MD-CS10x-000
1	Opto reference	Violet	Violet
18	Step clock input	Gray/brown	Gray/brown
2	Enable input	Red	Red
13	Direction input	Yellow/brown	Yellow/brown

Table 4.13 Universal input connections, 12-pin locking wire crimp

A mating connector kit is not available for this connector. Shop for compatible connectors at:

- Lumberg
- Phoenix
- Turck
- RDE Connectors

4.5 Interfacing Logic (differential inputs)

⚠ CAUTION

ELECTRICAL OVERSTRESS

The universal logic inputs are tolerant to +24 VDC. The differential input version inputs are TTL level and only tolerant to +5 VDC:

Do not exceed +5 VDC on the differential inputs.

Failure to follow these instructions can result in equipment damage.

4.5.1 P1 — 12’ (30.5 cm) ying leads interface

Wire Color	*Signal*
White	CW +
Orange	CW —
Blue	CCW —
Brown	CCW +

Table 4.14 Differential input connections, ying leads interface

4.5.2 P1 — 7-pin pluggable terminal interface

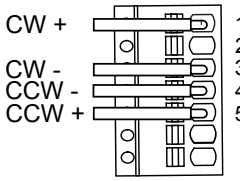

Pin #	*Signal*
1	CW +
3	CW —
4	CCW —
5	CCW +

Table 4.15 Differential input connections, 7-pin terminal

4.5.3 P1 — 12-pin locking wire crimp

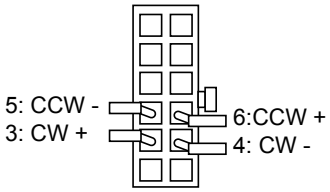

Pin #	*Signal*	*Wire colors*	
		MD-CC303-001	PD12-1434-FL3
3	CW +	White	White/blue
4	CW —	Green	Blue/white
5	CCW —	Orange	White/orange
6	CCW +	Blue	Orange/white

Table 4.16 Differential input connections, 12-pin locking wire crimp

Connectivity accessories

Mating connector kit CK-03
(contains 5 connector shells and the appropriate quantity of pins to make 5 cables)

Prototype development cable (10'/3.0 m)..... PD12-1434-FL3

Manufacturer (Tyco) part numbers

Connector shell.....1-794617-2

Pins.....794610-

4.6 Encoder interface

4.6.1 P4 — 10-pin wire crimp

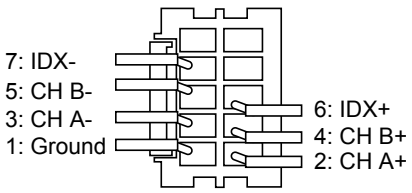

Pin #	*Signal*	*Wire color*
		ED-CABLE-JST10
1	GND	White/Brown
2	CH A+	White/green
3	CH A-	Green/white
4	CH B+	White/orange
5	CH B-	Orange/white
6	IDX+	White/blue
7	IDX-	Blue/white
8	No Connect	Brown/white

Table 4.17 P4 - Encoder interface

4.6.3 P1 — 19-pin M23 circular connector

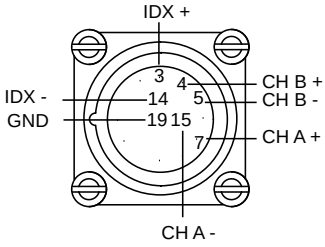

Pin #	*Signal*	*Wire colors*	
		MD-CC301-001	MD-CS10x-000
3	Index +	Gray	Gray
4	Channel B +	Red/blue	Red/blue
5	Channel B -	Green	Green
7	Channel A -	Gray/pink	Gray/pink
14	Index -	Brown/green	Brown/green
15	Channel A +	White	White
19	Ground	Brown	Brown

Table 4.18 Encoder interface - 19-pin M23 circular connector

A mating connector kit is not available for this connector. Shop for compatible connectors at:

- Lumberg
- Phoenix
- Turck
- RDE Connectors

4.7 USB to SPI communications converters

4.7.1 USB to 10-pin IDC — MD-CC300-001

Electrically isolated in-line USB to SPI converter pre-wired with mating connector to conveniently program and set con guration parameters

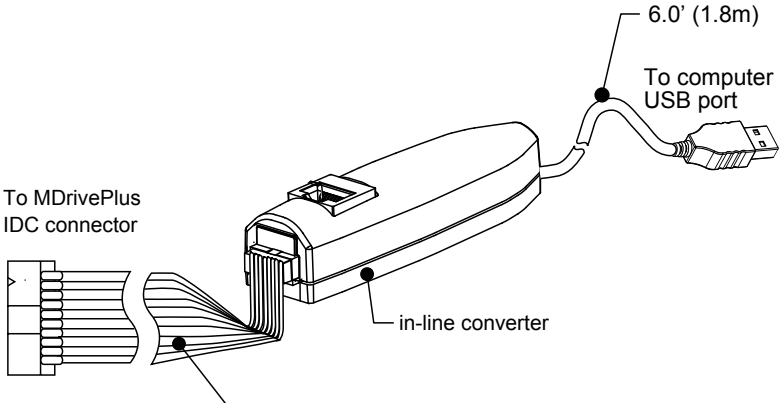

Figure 4.2 MD-CC300-001 communications converter cable

4.7.2 USB to 12-pin wire crimp — MD-CC303-001

Electrically isolated in-line USB to SPI converter pre-wired with mating connector to conveniently program and set con guration parameters. Power and logic signals are bundled into this connector via a second cable with signal accessibility via ying leads.

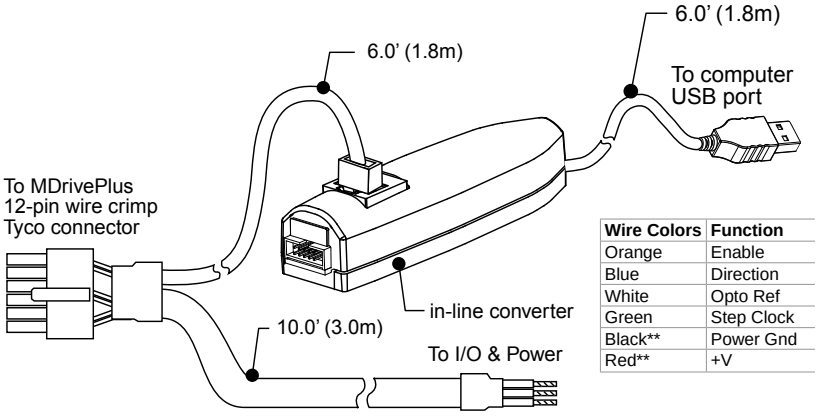

Wire Colors	Function
Orange	Enable
Blue	Direction
White	Opto Ref
Green	Step Clock
Black**	Power Gnd
Red**	+V

Figure 4.3 MD-CC303-001 communications converter cable

4.7.3 USB to 19-pin M23 circular — MD-CC301-001

Electrically isolated in-line USB to SPI converter pre-wired with mating connector to conveniently program and set con guration parameters. Power and logic signals are bundled into this connector via a second cable with signal accessibility via ying leads.

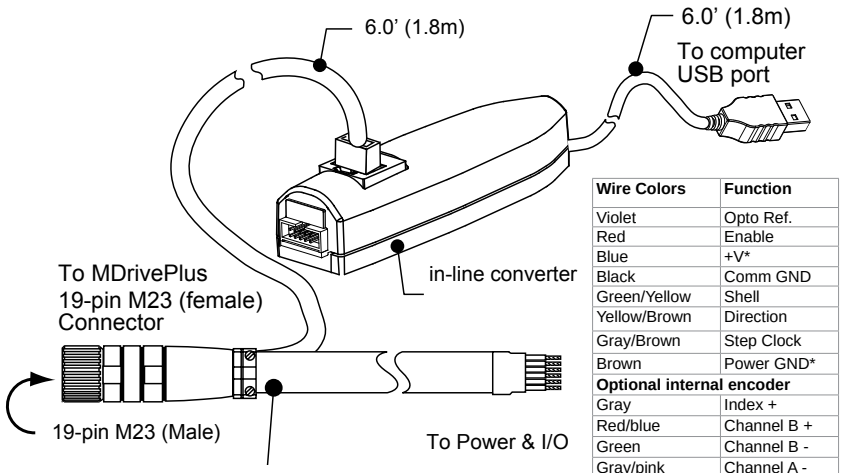

Wire Colors	Function
Violet	Opto Ref.
Red	Enable
Blue	+V*
Black	Comm GND
Green/Yellow	Shell
Yellow/Brown	Direction
Gray/Brown	Step Clock
Brown	Power GND*
Optional internal encoder	
Gray	Index +
Red/blue	Channel B +
Green	Channel B -
Gray/pink	Channel A -
Brown/green	Index -
White	Channel A +

Figure 4.4 MD-CC301-001 communications converter

4.8 Prototype development cables

4.8.1 P1 — 12-pin locking wire crimp PD12-1434-FL3

The PD12-1434-FL3 prototype development cable is used to rapidly interface the MDrive to the users power, communications and logic interface. This 10' (3.0 m) cable consists of a 12-pin locking wire crimp connector to plug directly into the MDrive P1 connector with ying leads on the opposite end to interface to power, communications and logic.

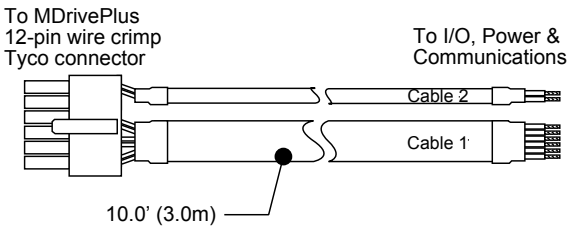

Wire Colors	Function
Gray/White	Chip Select
White/Gray	SPI MOSI
White/Brown	+5 VDC
Brown/White	SPI MISO
White/Green	SPI Clock
Green/White	Comm Gnd
White/Orange	Enable
Orange/White	Direction
White/Blue	Opto Ref
Blue/White	Step Clock
Black	Power Gnd
Red	+V
Uninsulated	Drain Wire

Figure 4.5 Prototype development cable PD12-1434-FL3

4.8.1 P2 — 19-pin M23 circular connector MD-CS10x-000

The MD-CS10x-000 prototype development cordset is used to rapidly interface the MDrive to the users power, communications and logic interface. This 13' (4.0 m) cable consists of a 119-pin M23 circular connector to plug directly into the MDrive P1 connector with ying leads on the opposite end to interface to power, communications and logic.

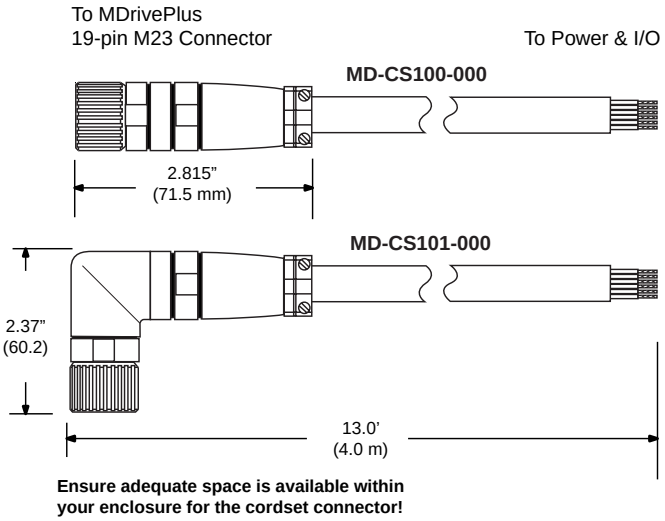

Wire Colors	Function
Violet	Opto Ref.
Red	Enable
Blue	+V*
White/Green	MOSI
White/Yellow	CS
White/Gray	+5 VDC
Black	Comm GND
Green/Yellow	Shell
Yellow/Brown	Direction
Yellow	SPI Clock
Pink	MISO
Gray/Brown	Step Clock
Brown	Power GND*
Optional internal encoder	
Gray	Index +
Red/blue	Channel B +
Green	Channel B -
Gray/pink	Channel A -
Brown/green	Index -
White	Channel A +

Figure 4.6 MD-CS10x-000 prototype development cordset

4.8.3 P4 — 10-pin wire crimp ED-CABLE-JST10

The ED-CABLE-JST10 prototype development cable is used to rapidly interface the MDrive optional encoder interface to the users controller. This 10' (3.0 m) cable consists of a 10-pin locking wire crimp connector to plug directly into the MDrive optional P4 connector with ying leads on the opposite end to interface a control device.

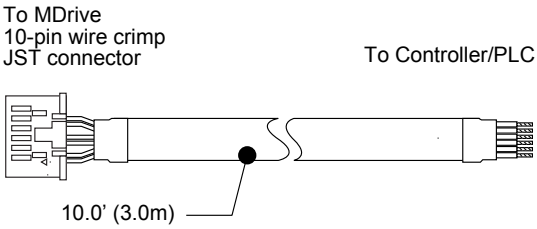

Pair	Wire Colors	Function
1	White/Blue	IDX+
	Blue/White	IDX-
2	White/Orange	CH B+
	Orange/White	CH B-
3	White/Green	CH A+
	Green/White	CH A-
4	White/Brown	Ground
	Brown/White	N/C

Figure 4.7 Encoder interface cable ED-CABLE-JST10

4.9 Mating connector kits

Use to build your own cables. Kit contains 5 mating shells with pins. Cable not supplied. Manufacturer's crimp tool recommended.

Mates to connector:

P2 10-pin IDC CK-01

P1 12-pin wire crimp CK-03

P4 10-pin wire crimp (encoder) CK-13

Page intentionally left blank

MDrive® 34
Microstepping

CE RoHS

1. Introduction
2. Speci cations
3. Mounting Recommendations
4. Interface and Connectivity

This page intentionally left blank

Table of Contents

1 Introduction 1-1
- 1.1 MDrive34Plus Microstepping unit overview 1-1
- 1.2 Product identi cation 1-2
- 1.3 Documentation reference 1-3
- 1.4 Product software 1-3

2 Speci cations 2-1
- 2.1 Mechanical speci cations 2-1
- 2.2 General speci cations 2-2
  - 2.2.1 Electrical speci cations 2-2
  - 2.2.2 Logic speci cations 2-2
  - 2.2.3 Communications speci cations 2-2
  - 2.2.4 Thermal speci cations 2-2
  - 2.2.5 Motion speci cations 2-3
  - 2.2.8 Motor speci cations 2-3
  - 2.2.9 Performance curves 2-3
- 2.3 Connectivity speci cations/pin assignments 2-5
  - 2.3.1 P1 — Power and logic (12” ying leads) 2-5
  - 2.3.2 P2 — Motor power (+V) 2-6
  - 2.3.3 P2 — SPI, communications 2-6
  - 2.4.4 Power, logic and communications — 12-pin wire .. crimp (universal input) 2-7
  - 2.3.5 P4 —- Internal magnetic encoder (differential) ... 2-7
- 2.5 Options 2-8
- 2.4 Connectivity 2-8

3 Mounting and connection recommendations 3-1
- 3.1 Mounting 3-2
- 3.2 Layout and interface guidelines 3-3
  - 3.2.1 Recommended Wiring 3-3
  - 4.2.2 Securing power and logic leads 3-4

4 Connection and interface 4-1
- 4.1 Interfacing communications 4-1
  - 4.1.1 P2 - 10-pin wire crimp connector 4-2
  - 4.1.2 P1 - 12-pin wire crimp connector 4-2
- 4.3 Interfacing DC power 4-3
  - 4.2.1 Recommended power supply characteristics 4-3
  - 4.2.2 Recommended wire gauge 4-3
  - 4.3.3 P1 — 12’ (30.5 cm) ying leads interface 4-3
  - 4.3.4 P3 — 2-pin locking wire crimp interface 4-4
  - 4.3.5 Power Interface using Drive Protection Module ..... DPM75 ..... 4.4
- 4.4 Interfacing logic 4-5
  - 4.4.1 P1 — 12’ (30.5 cm) ying leads interface 4-5
  - 4.4.2 P1 — 12-pin locking wire crimp 4-5
- 4.5 Optional encoder interface 4-6
  - 4.5.1 Flying leads 4-6
  - 4.5.2 10-pin wire crimp 4-6

Revision R031910

4.6 USB to SPI communications converters 4-7
4.6.1 USB to 10-pin IDC — MD-CC300-001 4-7
4.6.2 USB to 12-pin wire crimp — MD-CC303-001 4-7
4.7 Prototype development cables 4-8
4.7.1 P1 — 12-pin locking wire crimp PD12-1434-FL34-8
4.7.3 P4 — 10-pin wire crimp PD10-3400-FL3 4-8
4.8 Mating connector kits 4-8

List of Figures

Figure 1.1 Standard product options 1-2
Figure 2.1 External shaft mechanical speci cations 2-1
Figure 2.2 Performance curves - single length motor 2-3
Figure 2.3 Performance curves -double length motor 2-4
Figure 2.4 Performance curves -triple length motor 2-4
Figure 3.1 MDrive 34 Microstepping mounting and drill pattern 3-2
Figure 3.2 Securring leads 3-4
Figure 4.1 DPM75 Drive Protection Module 4-4
Figure 4.2 MD-CC300-001 communications converter cable 4-7
Figure 4.3 MD-CC303-001 communications converter cable 4-7
Figure 4.4 Prototype development cable PD12-1434-FL3 4-8
Figure 4.5 Encoder interface cable ED-CABLE-JST10 4-8

List of Tables

Table 2.1	Electrical speci cations	2-2
Table 2.2	I/O speci cations	2-2
Table 2.3	Communications speci cations	2-2
Table 2.4	Thermal speci cations	2-2
Table 2.5	Motion speci cations	2-3
Table 2.6	Microstepping motor speci cations	2-3
Table 2.7	Power, logic and optional internal encoder interface - 12” (308.8.mm) ying leads	2-5
Table 2.8	Motor power supply — P3	2-6
Table 2.9	P1 — SPI communications, 10-oin locking wire crimp	2-6
Table 2.10	P1 Logic and communications	2-7
Table 2.11	P4 — Internal encoder option	2-8
Table 4.1	Communications connections, P2 - 10-pin wire crimp	4-2
Table 4.2	Communications connections, 12-pin locking wire crimp	4-2
Table 4.3	Recommended power supply characteristics	4-3
Table 4.4	Recommended power supply wire gauge	4-3
Table 4.5	Power and ground connections, ying leads	4-3
Table 4.6	Power and ground connections, 2-pin locking wire crimp	4-4
Table 4.7	Universal input connections, ying leads	4-5
Table 4.8	Universal input connections, 12-pin locking wire crimp	4-5
Table 4.9	Flying leads encoder interface	4-6
Table 4.10	P4 - Optional encoder interface	4-6

Page intentionally left blank

1 Introduction

The MDrive® 34 Microstepping high torque integrated motor and step and direction driver is ideal for designers who want the simplicity of a motor with on-board electronics. The integrated electronics of the MDrive 34 eliminate the need to run motor cabling through the machine, reducing the potential for problems due to electrical noise.

1.1 MDrive 34 Microstepping unit overview

The unsurpassed smoothness and performance delivered by the MDrive 34 Microstepping are achieved through IMS's advanced 2nd generation current control. By applying innovative techniques to control current ow through the motor, resonance is signi cantly dampened over the entire speed range and audible noise is reduced.

The MDrive 34 accepts a broad input voltage range from +12 to +75 VDC, delivering enhanced performance and speed. Oversized input capacitors are used to minimize power line surges, reducing problems that can occur with long runs and multiple drive systems. An extended operating range of –40° to +75°C provides long life, trouble free service in demanding environments.

The MDrive 34 uses a NEMA 34 frame size high torque brushless step motor integrated with a microstepping driver, and accepts up to 20 resolution settings from full to 256 microsteps per full step, including: degrees, metric and arc minutes. These settings may be changed on-the- y or downloaded and stored in nonvolatile memory with the use of a simple GUI which is provided. This eliminates the need for external switches or resistors. Parameters are changed via an SPI port.

The versatile MDrive 34 Microstepping is available in multiple con gurations to t various system needs. Rotary motor versions come in three lengths and may include an encoder, control knob or planetary gearbox. Long life Acme screw linear actuators** are also available.

Connector style options give you choices for the best t and features. Select from 12.0" (30.5cm) ying leads or locking wire crimp connectors.

MDrive connectivity has never been easier with options ranging from all-inclusive QuickStart Kits to individual interfacing cables and mating connector kits to build your own cables.

The MDrive 34 is a compact, powerful and cost effective motion control solution that will reduce system cost, design and assembly time for a large range of brushless step motor applications.

Revision R031910

1.2 Product identi cation

Plus flying leads interface

K MDM1FSD34☐7 – OPTION

QuickStart Kit details above

Motor
A = Single Length & Linear Actuator**
B = Double Length
C = Triple Length



Example #1: Part Number **MDM1FSD34A7** is an MDrive34Plus Microstepping with 12" flying leads I/O & power interface, SPI communications with 10-pin IDC connector, and NEMA 34 single length motor.

Plus pluggable interface

K MDM1CS☐34☐7 – OPTION

QuickStart Kit details above

Motor
A = Single Length & Linear Actuator**
B = Double Length
C = Triple Length

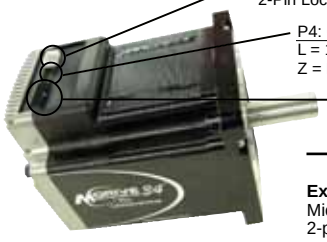

Example #2: Part Number **MDM1CSL34A7** is an MDrive34Plus Microstepping with 12-pin I/O & communications interface, 2-pin power connector, and NEMA 34 single length motor.

OPTIONS

Internal Encoder

–E☐

Refer to encoder specifications section for line counts and part numbers.

Example: **MDM1CSL34A7–EH** adds an internal 500-line count differential optical encoder with index mark to example #2, which is interfaced via a 10-pin friction lock wire crimp connector.

Control Knob

–N

Example: **MDM1CSL34A7–N a**dds a rear control knob for manual positioning to example #2.

Planetary Gearbox

–G☐☐☐ – F

Refer to gearbox page for complete table of ratios and part numbers.

Optional NEMA Flange

Example: **MDM1CSL34A7–G1A2** adds a 1-stage planetary gearbox with 5.18:1 ratio to example #2. Add –F for optional NEMA flange.

Figure 1.1 Standard product options

1.3 Documentation reference

The following User's manuals are available for the MDrive 34 Microstepping:

- Product manual, describes the technical data, installation, configuration and programming of the product.
- Quick Reference, describes the basic wiring, connection and use of this product. The quick reference is shipped in printed form with the product.

This documentation is also available for download from the IMS web site at http://www.imshome.com

1.4 Product software

The MDrive 34 Microstepping integrated motor and driver is configured using the IMS SPI motor interface graphical user interface. This free software may be downloaded from http://www.imshome.com/software_interfaces.html.

Installation and usages instructions are to be found in Part 1 of this document, Section 5.

Page intentionally left blank

2 Speci cations

2.1 Mechanical speci cations

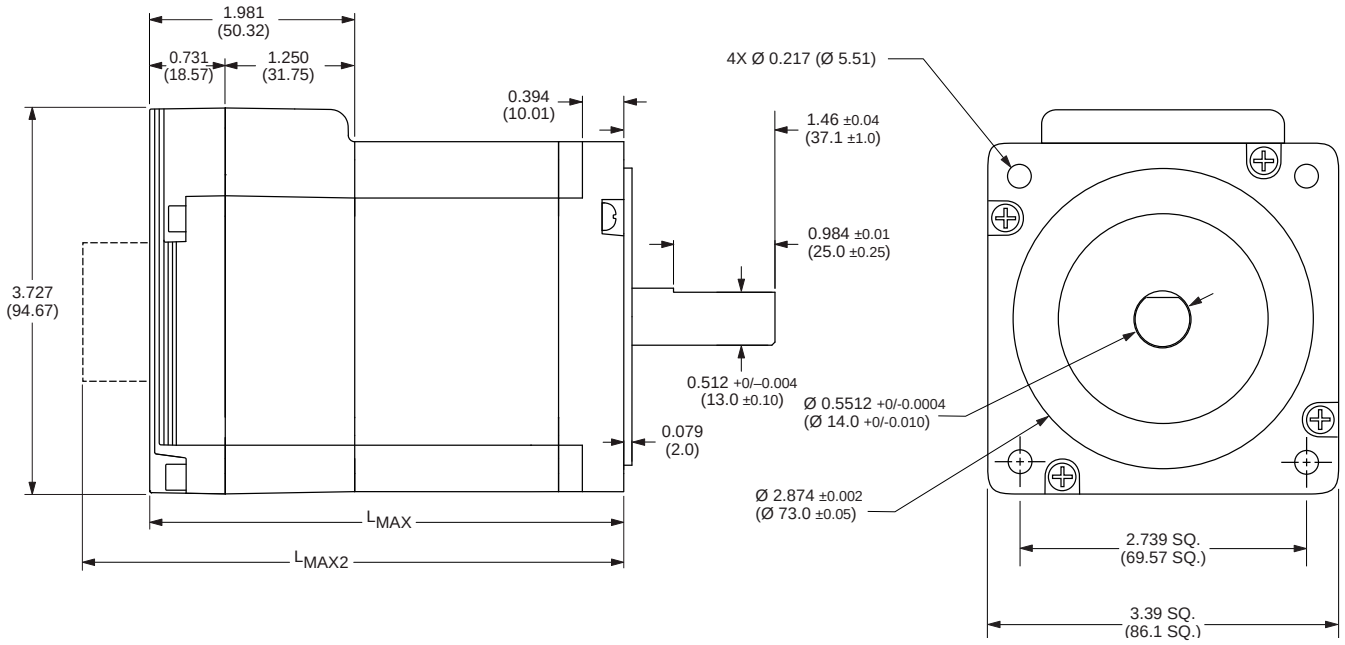

MDrive Lengths *Inches (mm)*

Motor Length	L_{MAX} SINGLE SHAFT, INTERNAL ENCODER or LINEAR ACTUATOR VERSION	L_{MAX2} CONTROL KNOB VERSION
Single	3.81 (96.77)	4.52 (114.81)
Double	4.60 (116.84)	5.31 (134.87)
Triple	6.17 (156.72)	6.88 (174.75)

L_{MAX2} Option

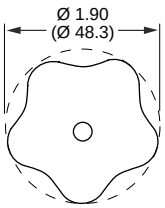

Control Knob

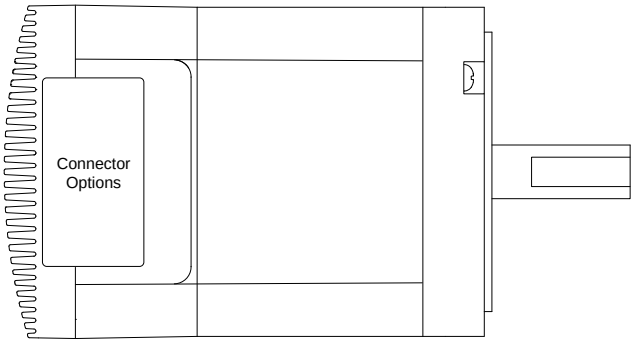

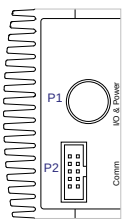

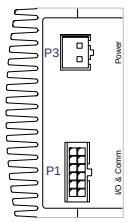

Pluggable Locking Wire Crimp

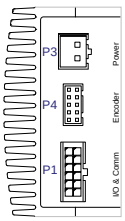

Pluggable Locking Wire Crimp with Internal Encoder

Figure 2.1 External shaft mechanical speci cations - dimensions in inches (mm)

2.2 General speci cations

2.2.1 Electrical speci cations

	Condition	Min	Typ	Max	Unit
Input voltage range	—	+12	—	+75	VDC
Max power supply current	—	—	—	4.0*	A

**per MDrive 34, Actual current depends on voltage and load.*

Table 2.1 Electrical speci cations

2.2.2 Logic speci cations

	Condition	Min	Typ	Max	Unit
Universal Inputs					
Isolated input voltage range (sourcing or sinking)	Isolated inputs	+5	—	+24	VDC
Current	+5 VDC max	—	—	8.7	mA
Current	+24 VDC max	—	—	14.6	mA
Differential Inputs					
Voltage range	—	0	—	+5	VDC
High level input voltage	—	+3.75	—	+5.75	VDC
Low level input voltage	—	—	—	≤+1.2	VDC

Table 2.2 I/O speci cations

2.2.3 Communications speci cations

Protocol	SPI

Table 2.3 Communications speci cations

2.2.4 Thermal speci cations

		Min	Typ	Max	Unit
Heat sink temperature	non-condensing humidity	-40	—	+75	ºC
Motor temperature	non-condensing humidity	-40	—	+90	ºC

Table 2.4 Thermal speci cations

2.2.5 Motion speci cations

Number of microstep resolutions	20

Available microsteps per revolution

200	400	800	1000	1600	2000	3200	5000	6400	10000
12800	20000	25000	25600	40000	50000	51200	36000[1]	21600[2]	25400[3]

1=0.01 deg/µstep 2=1 arc minute/µstep *3=0.001 mm/µstep
** 1" per revolution lead screw*

Digital filter range	50 ns to 12.9 µs (10 MHz to 38.8 kHz)
Clock types	step/direction, up/down, quadrature
Step frequency (max)	5 MHz
Step frequency minimum pulse width	100 ns

Table 2.5 Motion speci cations

2.2.8 Motor speci cations

Spcification	Single length	Double length	Triple length
Holding torque oz-in (N-cm)	381 (269)	575 (406)	1061(749)
Detent torque oz-in (N-cm)	10.9 (7.7)	14.16 (10.0)	19.83 (14.0)
Rotor inertia oz-in-sec^2 (kg-cm^2)	0.01416 (1.0)	0.02266 (1.6)	0.04815 (3.4)
Weight motor and driver lb (kg)	4.1 (1.90)	5.5 (2.5)	8.8 (4.0)

Table 2.6 Microstepping motor speci cations

2.2.9 Performance curves

Single length motor

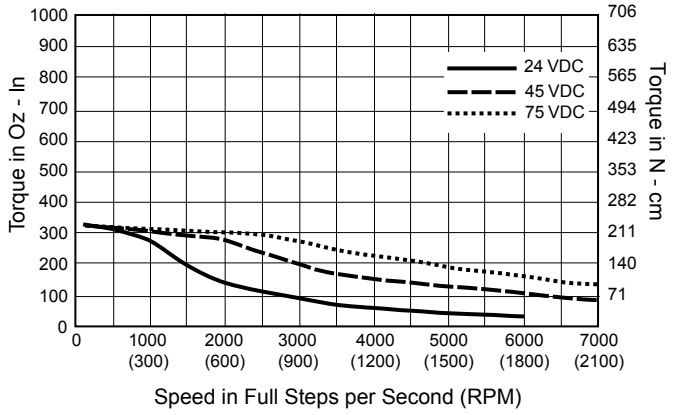

Figure 2.2 Performance curves - single length motor

Double length motor

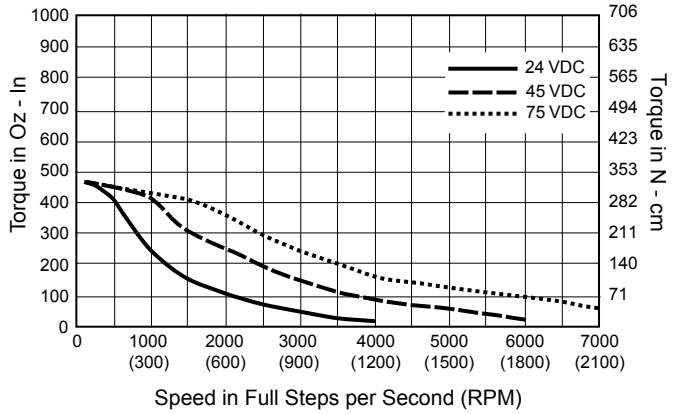

Figure 2.3 Performance curves -double length motor

Triple length motor

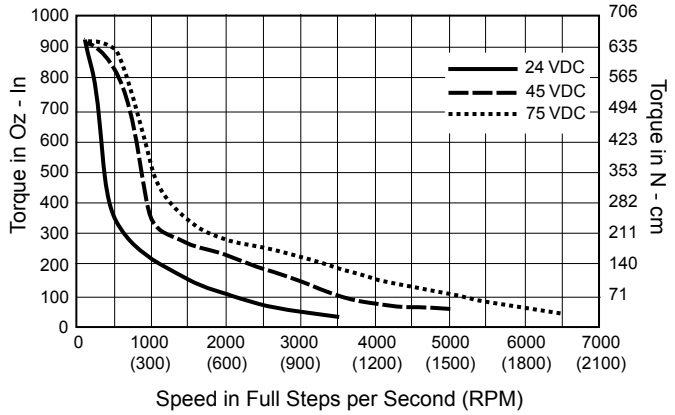

Figure 2.4 Performance curves -triple length motor

2.3 Connectivity speci cations/pin assignments

2.3.1 P1 — Power and logic (12” ying leads)

Wire Color	Function	Description	
White	Opto	Optocoupler reference	
Orange	Step clock	Step clock input	
Blue	Direction	CW/CCW direction input	
Brown	Enable	Output bridge enable input	
Black	GND	Power ground	
Red	+V	+12 to +75 VDC motor power	
Optional internal encoder			
		Differential	Single end
Yellow/black		Ground	Ground
Yellow/violet		Index +	Index
Yellow/blue		Channel A +	Channel A
Yellow/red		+5 VDC input	+5 VDC input
Yellow/brown		Channel B +	Channel B
Yellow/gray		Index -	—
Yellow/green		Channel A -	—
Yellow/orange		Channel B -	—

Table 2.7 Power, logic and optional internal encoder interface - 12” (308.8.mm) y-ing leads

2.3.2 P2 — Motor power (+V)

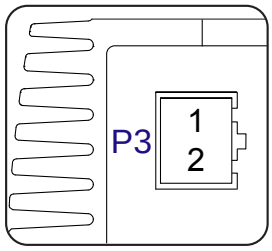

Pin #	Function	Description
1	+V	+12 to +75 VDC motor power
2	GND	Power supply return (ground)

Table 2.8 Motor power supply — P3

Connectivity Options
Prototype development cable:
PD02-3400-FL3

Mating connector kit:
CK-05

Mfg P/N:
Shell
Molex 51067-0200
Pins
Molex 50217-9101

2.3.3 P2 — SPI, communications

⚠ CAUTION

+5VDC OUTPUT

The +5 VDC output on connector P2 is for the express purpose of powering the IMS isolated communications converter cables. Do not use to power external devices.

Failure to follow these instructions may result in damage to system components!

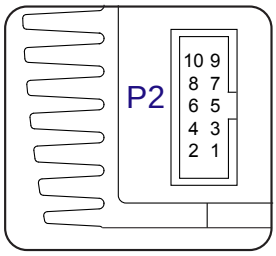

Pin #	Function	Description
1	N/C	No connect
2	N/C	No connect
3	N/C	No connect
4	CS	SPI Chip Select input
5	CGND	Communications ground
6	+5 VDC	+5 VDC output. This output is only to be used to power the optional communications converter cable MD-CC305-001. Do not use to power external devices.
7	MOSI	SPI Master Out - Slave in
8	CLK	SPI Clock
9	N/C	No connect
10	MISO	SPI Master In - Slave Out

Table 2.9 P1 — SPI communications, 10-oin locking wire crimp

Connectivity Options
USB to SPI Converter:
MD-CC300-001

Mating connector kit:
CK-01

Mfg P/N:
Shell
SAMTEC TCSD_05-01-N

2.4.4 Power, logic and communications — 12-pin wire crimp (universal input)

⚠ CAUTION

CONNECTOR PRODUCT ALERT!

The manufacturer of the Tyco 12-pin connector has begun marking the connector shell, PN 1-794617-2. with pin numbers as shown in the diagram on the right.

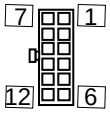

Disregard these markinings

Disregard these pin number markings. Use the pin numbering scheme as shown below.

Failure to follow these instructions can result in equipment damage.

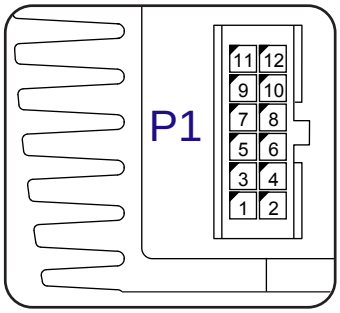

Connectivity Options
USB to SPI Converter:
MD-CC303-001

Prototype development cable:
PD12-1434-FL3

Mating connector kit:
CK-03

Mfg P/N:
Shell
Tyco: 1-794617-2

Pins
Tyco: 794610-1

Pin #	Function	Description
1	N/C	Not connected
2	N/C	Not connected
3	OPTO	Optocoupler power supply input
4	SCLK	Step Clock input
5	EN	The Enable Input can be used to enable or disable the driver output circuitry.
6	DIR	The direction Input controls the clockwise/ counterclockwise direction of the motor. It may be configured as sinking or sourcing depending on the state of the Optocoupler Reference.
7	+5 VDC	+5 VDC output. This output is only to be used to power the optional communications converter cable MD-CC305-001. Do not use to power external devices.
8	CLK	SPI Clock
9	CGND	Communications ground
10	MOSI	SPI Master In - Slave Out
11	CS	SPI Chip Select input
12	MISO	SPI Master In - Slave Out

Table 2.10 P1 Logic and communications

2.3.5 P4 —- Internal magnetic encoder (differential)

P2 is only present if the internal encoder option is selected.

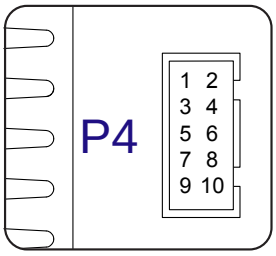

Connectivity Options
Prototypre development cable:
PD10-3400-FL3

Mating connector kit:
CK-02

Mfg P/N:
Shell
Hirose DF11-2428SC

Pins
Hirose DF11-TA2428HC

Pin #	Function	Description
1	GND	Encoder ground
2	CH A+	Channel A positive input
3	CH A-	Channel A negative input
4	CH B+	Channel B positive input
5	CH B-	Channel B negative input
6	IDX+	Index mark positive input
7	IDX-	Index mark negative input
8	N/C	Not connected
9	N/C	Not connected
10	N/C	Not connected

Table 2.11 P4 — Internal encoder option

2.4 Options

Drive Protection Module

The function of the DPM75 Drive Protection Module is to limit the surge current and voltage to a safe level when DC input power is switched on and off to the MDrive.

Internal Encoder

Internal differenti4l magnetic encoders with index mark are available with the MDrive 34 Microstepping.

Line counts available: 100, 200, 250, 256, 400, 500, 512, 1000

Differential Locking Cable (10.0'/3.0m) PD10-3400-FL3

Control Knob

The MDrive 34 is available with a factory-mounted rear control knob for manual shaft positioning.

Planetary Gearbox

Ef cient, low maitenance planetary gearboxes are offered assembled with the MDrive 34.

2.5 Connectivity

QuickStart Kit

For rapid design veri cation, all-inclusive QuickStart Kits have communication converter, prototype development cable(s), instructions and CD for MDrive initial functional setup and system testing.

Parameter Setup Cable

The optional 12.0' (3.6m) parameter setup cable assembly with inline USB to SPI converter facilitates communications, power and logic wiring and is recommended with rst order.

12-Pin Wire Crimp MD-CC305-001

10-pin IDC MD-CC300-001

Mating Connector Kits

Use to build your own cables. Kit contains 5 mating shells with pins. Cable not supplied. Manufacturer's crimp tool recommended.

Mates to connector:

12-Pin Wire Crimp CK-08

10-pin IDC CK-01

10-pin wire crimp CK-02

Encoder Cable

The following 10.0' (3m) interface cable is recommended with rst orders for MDrive 34 with an internal encoder:

Internal Encoder: 10-Pin Cable PD10-3400-FL3

Revision R031910

Page intentionally left blank.

3 Mounting and connection recommendations

⚠ CAUTION

LEAD RESTRAINT

Some Microstepping mounting con gurations require that the MDrive move along the screw. Ensure that all cabling is properly restrained to provide strain relief on connection points..

Failure to follow these instructions can result in equipment damage.

⚠ DANGER

EXPOSED SIGNALS

Hazardous voltage levels may be present if using an open frame power supply to power the product.

Failure to follow these instructions will result in death or serious injury.

⚠ CAUTION

HOT PLUGGING!

Do not connect or disconnect power, logic, or communications while the device is in a powered state.

Remove DC power by powering down at the AC side of the DC power supply.

Failure to follow these instructions can result in equipment damage.

3.1 Mounting

The maximum temperature for the MDrive 34 is 75°C measured at the heat sink, 980°C measured at the motor. Ensure that the unit is mounted to adequate heat sink plating to ensure that the temperature does not exceed 85°C.

Mounting Recommendation

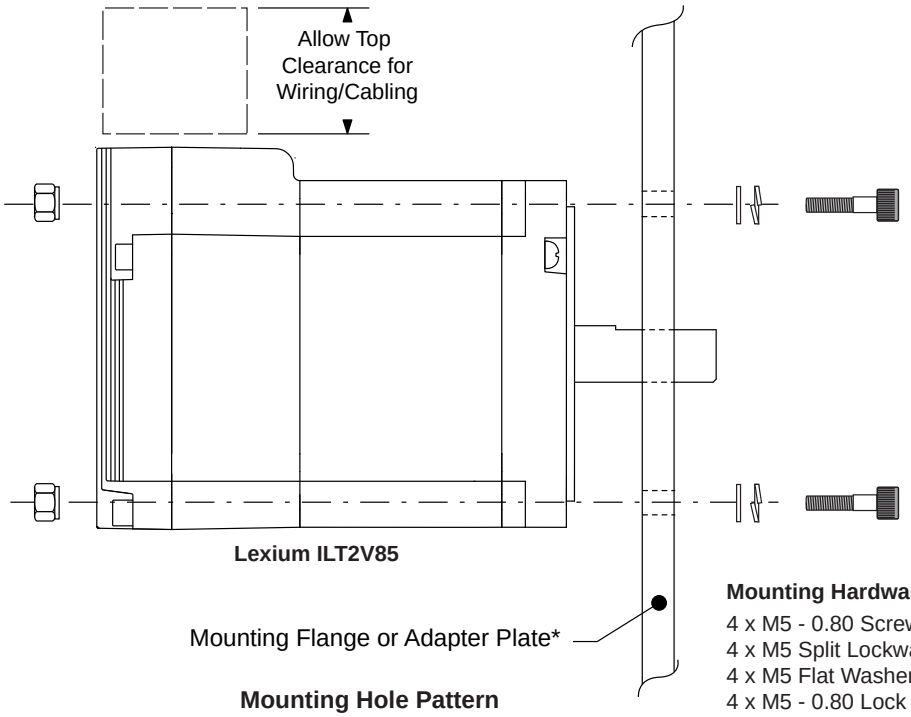

Mounting Hardware (Metric)

4 x M5 - 0.80 Screw
4 x M5 Split Lockwasher
4 x M5 Flat Washer
4 x M5 - 0.80 Lock Nuts

Mounting Hardware is not supplied

Mounting Hole Pattern

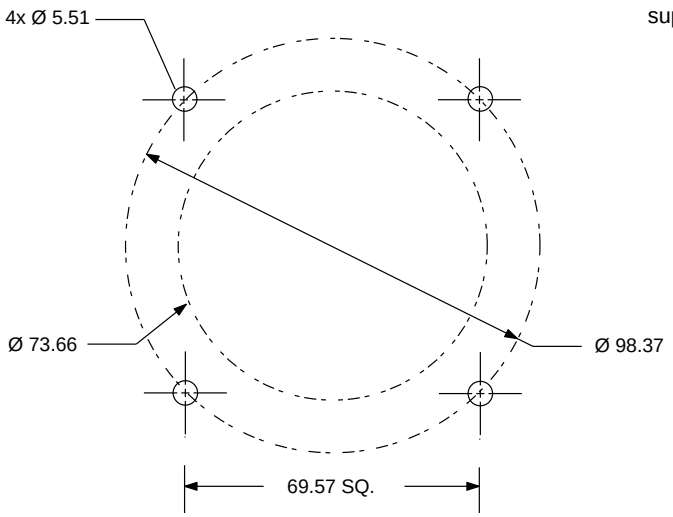

Figure 3.1 MDrive 34 Microstepping mounting and drill pattern

Revision R031910

3.2 Layout and interface guidelines

⚠ DANGER

EXPOSED SIGNALS

Hazardous voltage levels may be present if using an open frame power supply to power the product.

Failure to follow these instructions will result in death or serious injury.

⚠ CAUTION

HOT PLUGGING!

Do not connect or disconnect power, logic, or communications while the device is in a powered state.

Remove DC power by powering down at the AC side of the DC power supply.

Failure to follow these instructions can result in equipment damage.

Logic level cables must not run parallel to power cables. Power cables will introduce noise into the logic level cables and make your system unreliable.

Logic level cables must be shielded to reduce the chance of EMI induced noise. The shield needs to be grounded at the signal source to earth. The other end of the shield must not be tied to anything, but allowed to oat. This allows the shield to act as a drain.

Power supply leads to the MDrive 34 need to be twisted. If more than one MDrive is to be connected to the same power supply, run separate power and ground leads from the supply to each driver.

3.2.1 Recommended Wiring

The following wiring/cabling is recommended for use with the MDrive 34:

Logic Wiring..... 22 AWG

Wire Strip Length..... 0.25” (6.0 mm)

Power, Ground .....See Part 1 Section 3 of this document

4.2.2 Securing power and logic leads

Some applications may require that the MDrive move with the axis motion. If this is a requirement of your application, the motor leads must be properly anchored. This will prevent exing and tugging which can cause damage at critical connection points.

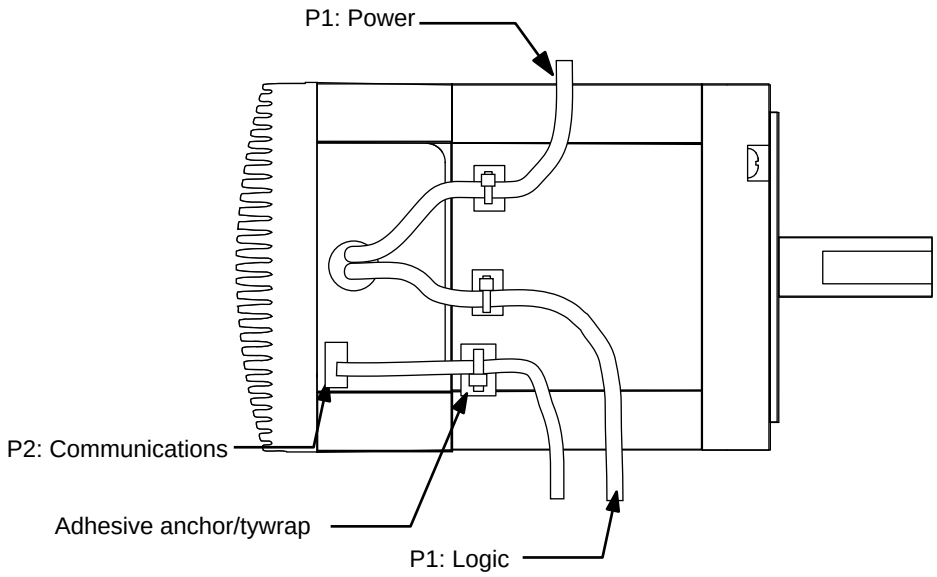

Figure 3.2 Securring leads

4 Connection and interface

⚠ DANGER

EXPOSED SIGNALS

Hazardous voltage levels may be present if using an open frame power supply to power the product.

Failure to follow these instructions will result in death or serious injury.

⚠ CAUTION

SWITCHING DC POWER/HOT PLUGGING

Do not connect or disconnect power, logic, or communications while the device is in a powered state.

Remove DC power by powering down at the AC side of the DC power supply.

Failure to follow these instructions can result in equipment damage.

⚠ CAUTION

CONNECTOR PRODUCT ALERT!

The manufacturer of the Tyco 12-pin connector has begun marking the connector shell, PN 1-794617-2. with pin numbers as shown in the diagram on the right.

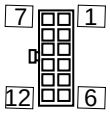

Disregard these markinings

Disregard these pin number markings. Use the pin numbering scheme as shown in this document.

Failure to follow these instructions can result in equipment damage.

4.1 Interfacing communications

SPI communications may be interfaced using one of two possible connector options:

1. 10-pin IDC connector at P2
2. 12-pin locking wire crimp connector at P1

If using the 12-pin locking wire crimp connector at P1, there will be no P2 connector. The P1 option will bundle power, logic and communications on a single connector.



For general SPI communications methods and practices please see Part 1, Section 5 of this document.

4.1.1 P2 - 10-pin wire crimp connector

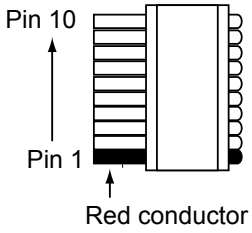

Pin #	Function	Description
1	N/C	Not connected
2	N/C	Not connected
3	N/C	Not connected
4	CS	SPI chip select, selected when low.
5	GND	Communications ground
6	+5V	+ 5 VDC output. Used to power the IMS communications converter ONLY! Not for general purpose use.
7	MOSI	SPI master out - slave in
8	CLK	SPI clock
9	N/C	Not connected
10	MISO	SPI master in - slave out

Table 4.1 Communications connections, P2 - 10-pin wire crimp

Connectivity accessories

Mating connector kit CK-01
(contains 5 connector shells, ribbon cable not included)

Communications converter cable (10'/3.0 m).....MD-CC300-001

Manufacturer (SAMTEC) part numbers

Connector shell.....TCSD-05-01-N

Ribbon cable.....Tyco 1-57051-9

4.1.2 P1 - 12-pin wire crimp connector

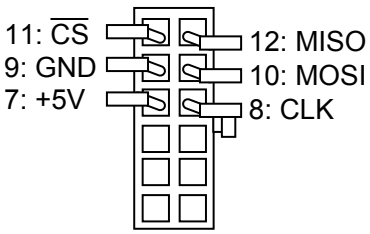

Pin #	*Signal*	*Wire colors*	
		MD-CC303-001	PD12-1434-FL3
7	+ 5 VDC output	—	White/brown
8	SPI clock	—	White/green
9	Comm ground	—	Green/white
10	SPI MOSI	—	White/gray
11	SPI chip select	—	Gray/white
12	SPI MISO	—	Brown/white

Table 4.2 Communications connections, 12-pin locking wire crimp

Connectivity accessories

Mating connector kit CK-03
(contains 5 connector shells and the appropriate quantity of pins to make 5 cables)

Prototype development cable (10'/3.0 m)..... PD12-1434-FL3

Manufacturer (Tyco) part numbers

Connector shell.....1-794617-2

Pins.....794610-1

4.3 Interfacing DC power

See part 1 of this document, section 3, for recommended power cable con gurations.

> **⚠ CAUTION**
>
> OVER VOLTAGE
>
> The DC voltage range for the MDrive 34 is +12 to +75 VDC. Ensure that motor back EMF is factored into your power supply size calculations.
>
> Allow 3.0 A maximum power supply output current per MDrive 34 in the system. Actual power supply current will depend on voltage and load.
>
> **Failure to follow these instructions can result in equipment damage.**

4.2.1 Recommended power supply characteristics

Voltage range	+12 to +75 VDC
Type	Unregulated linear
Ripple	± 5%
Output current	4.0 A (per MDrive 34)

Table 4.3 Recommended power supply characteristics

4.2.2 Recommended wire gauge

Cable Length: Feet (meters)	10 (3.0)	25 (7.6)	50 (15.2)	75 (22.9)	100 (30.5)
Amps Peak	**Minimum AWG**				
1 Amp Peak	20	20	18	18	18
2 Amps Peak	20	18	16	14	14
3 Amps Peak	18	16	14	12	12
4 Amps Peak	16	14	12	12	12

Table 4.4 Recommended power supply wire gauge

4.3.3 P1 — 12’ (30.5 cm) ying leads interface

Wire Color	
Red	+12 to +75 VDC supply
Black	Power ground

Table 4.5 Power and ground connections, ying leads

4.3.4 P3 — 2-pin locking wire crimp interface

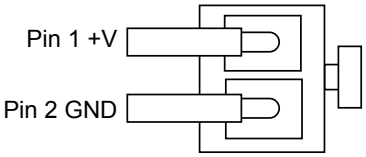

Pin #	*Signal*	*Wire colors*
		PD12-1434-FL3
1	+12 to +75 VDC supply	Red
2	Power ground	Black

Table 4.6 Power and ground connections, 2-pin locking wire crimp

Connectivity accessories

Mating connector kit CK-05
(contains 5 connector shells and the appropriate quantity of pins to make 5 cables)

Prototype development cable (10'/3.0 m)..... PD02-3400-FL3

Manufacturer (Molex) part numbers

Connector shell.....51067-0200

Pins.....50217-9101

4.3.5 Power Interface using Drive Protection Module DPM75

The DPM75 Drive Protection Module will limit surge currents for one (1) MDrive 34 at 75 VDC to allow switching DC Power.

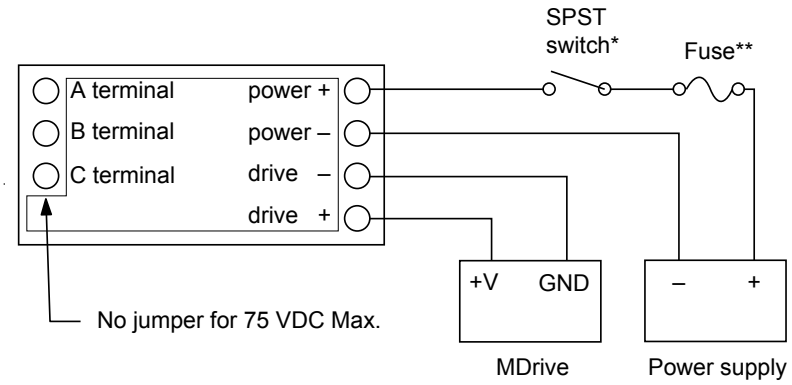

* Do not switch negative side of supply
**Fuse = 6.3 Amp slow blow (recommended: Bussman S505-6.3A or Littelfuse 215006.3). The fuse is optional.

Figure 4.1 DPM75 Drive Protection Module

4.4 Interfacing logic

See part 1 of this document, section 6, for logic interface con gurations and methods.

4.4.1 P1 — 12’ (30.5 cm) ying leads interface

Wire Color	*Signal*
White	Opto reference
Orange	CW/CCW direction input
Blue	Step clock input
Brown	Enable input

Table 4.7 Universal input connections, ying leads

4.4.2 P1 — 12-pin locking wire crimp

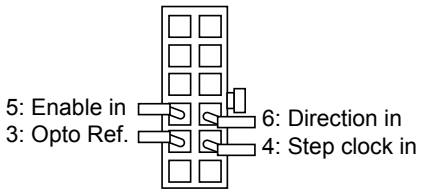

Pin #	*Signal*	*Wire colors*	
		MD-CC303-001	PD12-1434-FL3
3	Opto reference	White	White/blue
4	Step clock input	Green	Blue/white
5	Enable input	Orange	White/orange
6	Direction input	Blue	Orange/white

Table 4.8 Universal input connections, 12-pin locking wire crimp

Connectivity accessories

Mating connector kit CK-03
(contains 5 connector shells and the appropriate quantity of pins to make 5 cables)

Prototype development cable (10’/3.0 m)..... PD12-1434-FL3

Manufacturer (Tyco) part numbers

Connector shell..... 1-794617-2

Pins..... 794610-1

4.5 Optional encoder interface

4.5.1 Flying leads

Wire Color	Function	Description	
		Differential	Single end
Yellow/black		Ground	Ground
Yellow/violet		Index +	Index
Yellow/blue		Channel A +	Channel A
Yellow/red		+5 VDC input	+5 VDC input
Yellow/brown		Channel B +	Channel B
Yellow/gray		Index -	—
Yellow/green		Channel A -	—
Yellow/orange		Channel B -	—

Table 4.9 Flying leads encoder interface

4.5.2 10-pin wire crimp

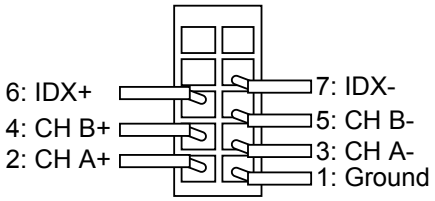

Pin #	*Signal*	*Wire color*
		PD10-3400-FL3
1	GND	White/Brown
2	CH A+	White/green
3	CH A-	Green/white
4	CH B+	White/orange
5	CH B-	Orange/white
6	IDX+	White/blue
7	IDX-	Blue/white
8-10	No Connect	

Table 4.10 P4 - Optional encoder interface

onnectivity accessories

Mating connector kit CK-02
(contains 5 connector shells and the appropriate quantity of pins to make 5 cables)

Manufacturer (Hirose) part numbers

Connector shell..... DF11-10DS-2C

Pins..... DF11-2428SC

Revision R031910

4.6 USB to SPI communications converters

4.6.1 USB to 10-pin IDC — MD-CC300-001

Electrically isolated in-line USB to SPI converter pre-wired with mating connector to conveniently program and set con guration parameters

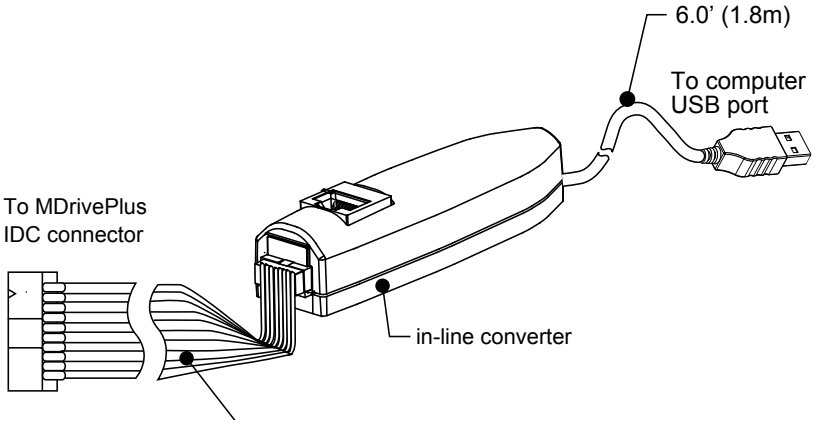

Figure 4.2 MD-CC300-001 communications converter cable

4.6.2 USB to 12-pin wire crimp — MD-CC303-001

Electrically isolated in-line USB to SPI converter pre-wired with mating connector to conveniently program and set con guration parameters. Power and logic signals are bundled into this connector via a second cable with signal accessibility via ying leads.

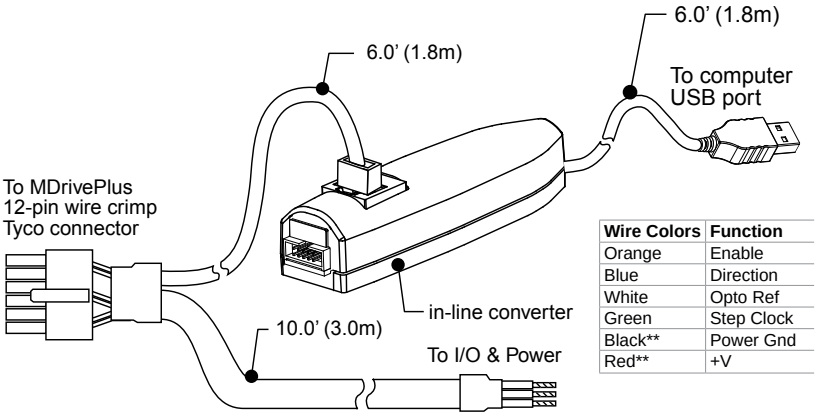

Wire Colors	Function
Orange	Enable
Blue	Direction
White	Opto Ref
Green	Step Clock
Black**	Power Gnd
Red**	+V

Figure 4.3 MD-CC303-001 communications converter cable

4.7 Prototype development cables

4.7.1 P1 — 12-pin locking wire crimp PD12-1434-FL3

The PD12-1434-FL3 prototype development cable is used to rapidly interface the MDrive to the users power, communications and logic interface. This 10’ (3.0 m) cable consists of a 12-pin locking wire crimp connector to plug directly into the MDrive P1 connector with ying leads on the opposite end to interface to power, communications and logic.

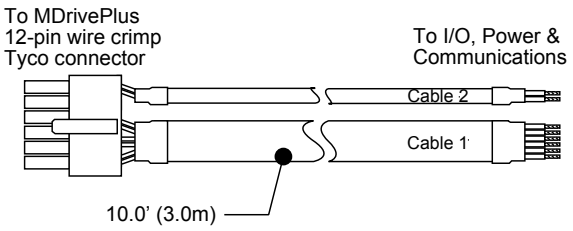

Wire Colors	Function
Gray/White	Chip Select
White/Gray	SPI MOSI
White/Brown	+5 VDC
Brown/White	SPI MISO
White/Green	SPI Clock
Green/White	Comm Gnd
White/Orange	Enable
Orange/White	Direction
White/Blue	Opto Ref
Blue/White	Step Clock
Black	Power Gnd
Red	+V
Uninsulated	Drain Wire

Figure 4.4 Prototype development cable PD12-1434-FL3

4.7.3 P4 — 10-pin wire crimp PD10-3400-FL3

Used to rapidly interface the MDrive optional encoder interface to the users controller. This 10’ (3.0 m) cable consists of a 10-pin wire crimp connector to plug directly into the MDrive optional P4 connector with y-ing leads on the opposite end to interface a control device.

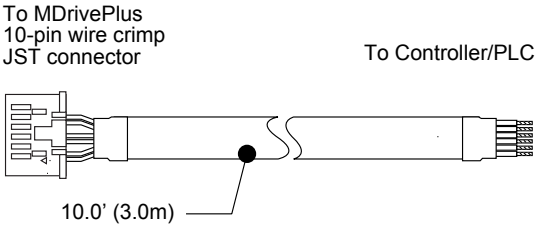

Pair	Wire Colors	Function
1	White/Blue	IDX+
	Blue/White	IDX-
2	White/Orange	CH B+
	Orange/White	CH B-
3	White/Green	CH A+
	Green/White	CH A-
4	White/Brown	Ground
	Brown/White	N/C

Figure 4.5 Encoder interface cable ED-CABLE-JST10

4.8 Mating connector kits

Use to build your own cables. Kit contains 5 mating shells with pins. Cable not supplied. Manufacturer’s crimp tool recommended.

Mates to connector:

P2 10-pin wire crimp.....CK-01

P1 12-pin wire crimp.....CK-03

P4 10-pin wire crimp (encoder) CK-13

MDrive® 34AC

Microstepping

1. Introduction
2. Speci cations
3. Mounting Recommendations
4. Interface and Connectivity

This page intentionally left blank

Table of Contents

1 Introduction 1-1
1.1 MDrive 34AC Microstepping unit overview 1-1
1.2 Product identi cation 1-2
1.3 Documentation reference 1-3
1.4 Product software 1-3

2 Speci cations 2-1
2.1 Mechanical speci cations 2-1
2.2 General speci cations 2-2
2.2.1 Electrical speci cations 2-2
2.2.2 Logic speci cations 2-2
2.2.3 Communications speci cations 2-2
2.2.4 Thermal speci cations 2-2
2.2.5 Motion speci cations 2-3
2.2.8 Motor speci cations 2-3
2.2.9 Performance curves 2-3
2.3 Connectivity speci cations/pin assignments 2-4
2.3.1 P3 — AC power (3-pin Euro AC) 2-4
2.3.2 Logic, communications and optional encoder — ... 19-pin M23 2-5
2.4 Connectivity 2-6
2.5 Options 2-6

3 Connection and interface 3-1
3.1 Interfacing communications 3-1
3.1.3 P1 - 19-pin M23 circular connector 3-2
3.2 Interfacing AC power 3-2
3.2.1 P3 — 3-pin Euro AC 3-2
3.3 Interfacing AC power 3-3
43.1 P1 — 19-pin M23 circular connector 3-3
3.4 Encoder interface 3-3
3.3.1 P1 — 19-pin M23 circular connector 3-3
3.4 USB to SPI communications converters 3-4
3.3.1 USB to 19-pin M23 circular — MD-CC301-001 . 3-4
3.5 Prototype development cables 3-5
3.5.1 P3 — 3-pin Euro AC 3-5
3.5.2 P2 — 19-pin M23 circular connector MD-... CS10x-000 3-6

Revision R031910

List of Figures

Figure 1.1 Standard product options 1-2
Figure 2.1 External shaft mechanical speci cations 2-1
Figure 2.3 Motor performance curve — 120 VAC 2-3
Figure 2.4 Motor performance curve — 240 VAC 2-4
Figure 3.1 MD-CC301-001 communications converter 3-4
Figure 3.2 MD-CS20x-000 3-5
Figure 3.3 MD-CS10x-000 prototype development cordset 3-6

List of Tables

Table 2.1 Electrical speci cations 2-2
Table 2.2 I/O speci cations 2-2
Table 2.3 Communications speci cations 2-2
Table 2.4 Thermal speci cations 2-2
Table 2.5 Motion speci cations 2-3
Table 2.6 Microstepping motor speci cations 2-3
Table 2.7 P3 DC power, 2-pin locking wire crimp 2-4
Table 2.8 P1 Power, logic, communications and optional encoder 2-5
Table 3.1 SPI communications, 19-pin M23 circular 3-2
Table 3.2 AC standard wire colors 3-2
Table 3.3 Universal input connections, 12-pin locking wire crimp 3-3
Table 3.4 Encoder interface - 19-pin M23 circular connector 3-3

1 Introduction

The MDrive® 34AC Microstepping high torque integrated motor and step and direction driver is ideal for designers who want the simplicity of a motor with on-board electronics. The integrated electronics of the MDrive 34AC eliminate the need to run motor cabling through the machine, reducing the potential for problems due to electrical noise.

1.1 MDrive 34AC Microstepping unit overview

The unsurpassed smoothness and performance delivered by the MDrive 34AC Microstepping are achieved through IMS's advanced 2nd generation current control. By applying innovative techniques to control current ow through the motor, resonance is signi cantly dampened over the entire speed range and audible noise is reduced.

The MDrive 34AC accepts a broad input voltage range from 95 to 264 VAC, delivering enhanced performance and speed. Oversized input capacitors are used to minimize power line surges, reducing problems that can occur with long runs and multiple drive systems. An extended operating range of –40° to +75°C provides long life, trouble free service in demanding environments.

The MDrive 34AC uses a NEMA 34 frame size high torque brushless step motor combined with a microstepping driver, and accepts up to 20 resolution settings from full to 256 microsteps per full step, including: degrees, metric and arc minutes. These settings may be changed on-the- y or downloaded and stored in nonvolatile memory with the use of a simple GUI which is provided. This eliminates the need for external switches or resistors. Parameters are changed via an SPI port.

For use in environments where exposure to chemical, dust and liquids may occur, a sealed MDrive 34AC Microstepping unit with circular connectors meets IP65 speci cations.

The versatile MDrive 34AC Microstepping is available in multiple con gurations to t various system needs. Three rotary motor lengths are available and may include an internal optical encoder, a control knob for manual positioning or an integrated planetary gearbox.

Interface connections are accomplished using standard industrial circular connectors. And connectivity has never been easier with options ranging from all-inclusive QuickStart Kits to individual interfacing cables.

The MDrive 34AC is a compact, powerful and cost effective solution that will reduce system cost, design and assembly time for a large range of brushless step motor applications.

Revision R031910

1.2 Product identi cation

Plus
base version

Plus-65
IP65 sealed

K MDM ☐ MSZ34 ☐ ☐ – OPTION

- K: QuickStart Kit details above
- MDM ☐: MDrive Version
  - 1 = Plus
  - 2 = Plus-65 (sealed)
- MSZ34 ☐ ☐: Motor
  - A = Single Length
  - B = Double Length
  - C = Triple Length
- ☐: Input Voltage
  - 1 = 120 Volt
  - 2 = 240 Volt
- OPTION



P3: Power, 3-Pin Euro AC Connector

P1: I/O & Communications, 19-Pin M23 Circular Connector

Example #1: Part Number **MDM1MSZ34B2** is an MDrive34AC Plus Microstepping with 19-pin M23 circular I/O & SPI communications interface, NEMA 34 double length motor and 240 input voltage.

OPTIONS

Internal Encoder

–E ☐

Refer to encoder specifications section for line counts and part numbers.

Example: **MDM1MSZ34B2–EX** adds an internal 512-line differential optical encoder with index mark to example #1.

Control Knob

–N

Example: **MDM1MSZ34B2–N a**dds a rear control knob to example #1. *Not available with sealed –65 versions.*

Planetary Gearbox

–G ☐☐☐ – F

- –G ☐☐☐: Refer to gearbox page for complete table of ratios and part numbers.
- F: Optional NEMA Flange

Example: **MDM1MSZ34B2–G1A2** adds a 1-stage planetary gearbox with 5.18:1 ratio to example #1. Add –F for optional NEMA flange.

Figure 1.1 Standard product options

Revision R031910

1.3 Documentation reference

The following User's manuals are available for the MDrive 34AC Microstepping:

- Product manual, describes the technical data, installation, configuration and programming of the product.
- Quick Reference, describes the basic wiring, connection and use of this product. The quick reference is shipped in printed form with the product.

This documentation is also available for download from the IMS web site at http://www.imshome.com

1.4 Product software

The MDrive 34AC Microstepping integrated motor and driver is configured using the IMS SPI motor interface graphical user interface. This free software may be downloaded from http://www.imshome.com/software_interfaces.html.

Installation and usages instructions are to be found in Part 1 of this document, Section 5.

Page intentionally left blank

2 Speci cations

2.1 Mechanical speci cations

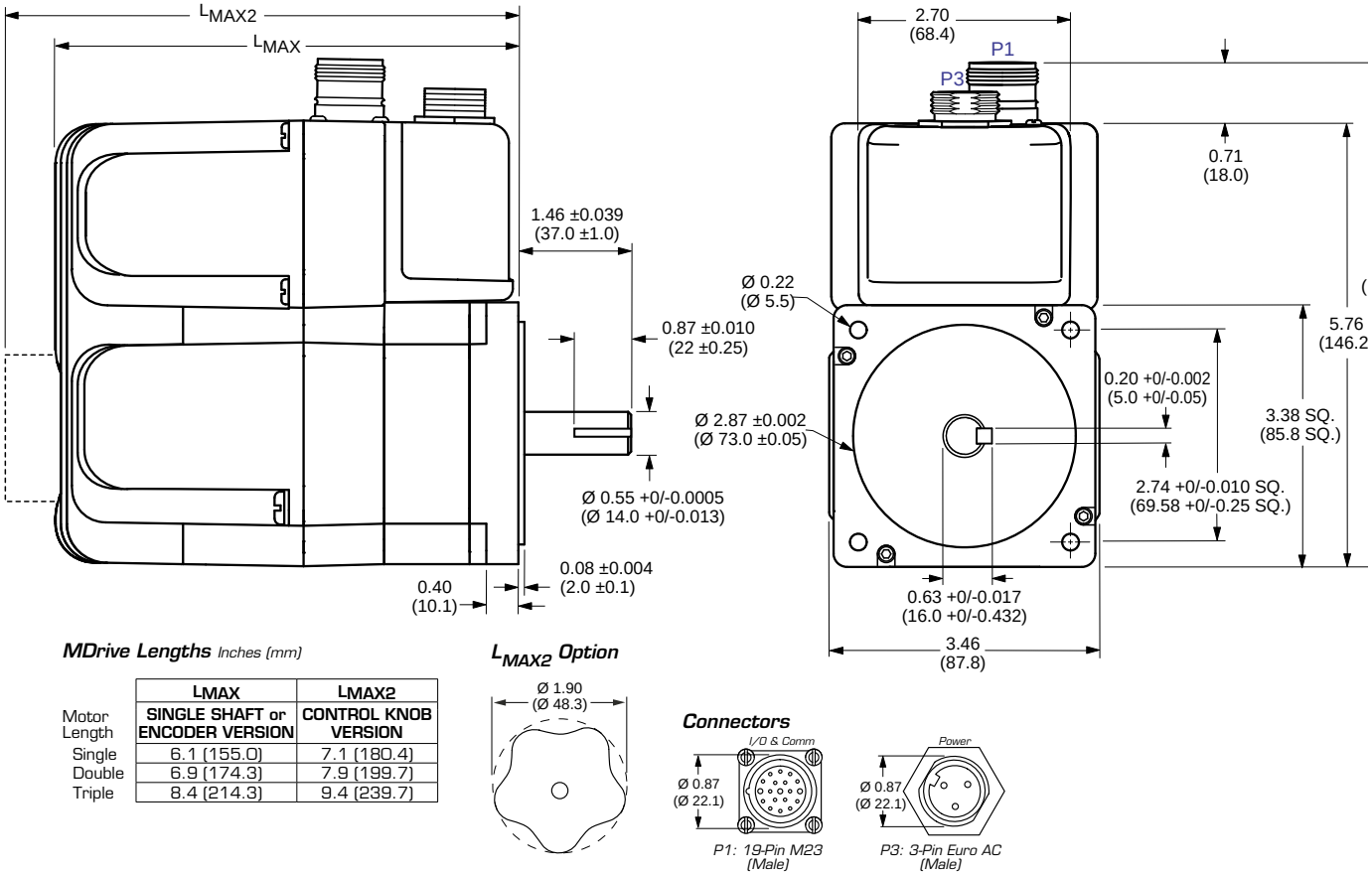

Motor Length	LMAX SINGLE SHAFT or ENCODER VERSION	LMAX2 CONTROL KNOB VERSION
Single	6.1 (155.0)	7.1 (180.4)
Double	6.9 (174.3)	7.9 (199.7)
Triple	8.4 (214.3)	9.4 (239.7)

Figure 2.1 External shaft mechanical speci cations - dimensions in inches (mm)

2.2 General speci cations

2.2.1 Electrical speci cations

		Condition	Min	Typ	Max	Unit
Input voltage range	120 VAC	—	95	—	132	VAC
	240 VAC	—	95		264	VAC
Aux-Logic Input Voltage*		—	+12	—	+24	VDC
Max Aux-Logic Supply Current (Per MDrive)**		—	—	—	194	mA

** Maintains power to control and feedback circuits [only] when input voltage is removed*

Table 2.1 Electrical speci cations

2.2.2 Logic speci cations

	Condition	Min	Typ	Max	Unit
Universal Inputs					
Isolated input voltage range (sourcing or sinking)	Isolated inputs	+5	—	+24	VDC
Current	+5 VDC max	—	—	8.7	mA
Current	+24 VDC max	—	—	14.6	mA
Differential Inputs					
Voltage range	—	0	—	+5	VDC
High level input voltage	—	+3.75	—	+5.75	VDC
Low level input voltage	—	—	—	≤+1.2	VDC

Table 2.2 I/O speci cations

2.2.3 Communications speci cations

Protocol	SPI

Table 2.3 Communications speci cations

2.2.4 Thermal speci cations

		Min	Typ	Max	Unit
Heat sink temperature	non-condensing humidity	-40	—	+75	ºC
Motor temperature	non-condensing humidity	-40	—	+90	ºC

Table 2.4 Thermal speci cations

2.2.5 Motion speci cations

Number of microstep resolutions	20

Available microsteps per revolution

200	400	800	1000	1600	2000	3200	5000	6400	10000
12800	20000	25000	25600	40000	50000	51200	36000[1]	21600[2]	25400[3]

1=0.01 deg/µstep 2=1 arc minute/µstep *3=0.001 mm/µstep
** 1" per revolution lead screw*

Digital filter range	50 ns to 12.9 µs (10 MHz to 38.8 kHz)
Clock types	step/direction, up/down, quadrature
Step frequency (max)	5 MHz
Step frequency minimum pulse width	100 ns

Table 2.5 Motion speci cations

2.2.8 Motor speci cations

Specification	Single length	Double length	Triple length
Holding torque oz-in (N-cm)	330 (233)	500 (353)	700 (529)
Detent torque oz-in (N-cm)	10.9 (7.7)	14.16 (10.0)	19.83 (14.0)
Rotor inertia oz-in-sec^2 (kg-cm^2)	0.0142 (1.0)	0.0227 (1.6)	0.0482 (3.4)
Weight motor and driver lb (kg)	6.4 (2.9)	7.7 (3.5)	11.0 (5.0)

Table 2.6 Microstepping motor speci cations

2.2.9 Performance curves

120 VAC motor performance

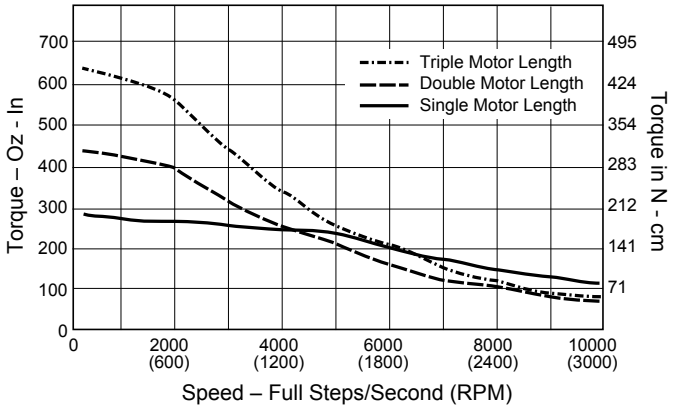

Figure 2.3 Motor performance curve — 120 VAC

240 VAC motor performance

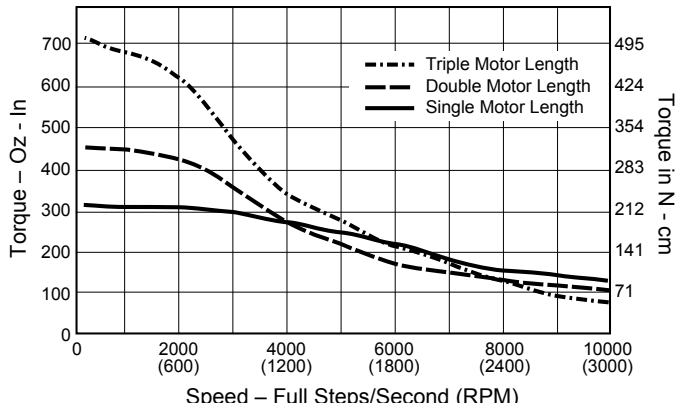

Figure 2.4 Motor performance curve — 240 VAC

2.3 Connectivity speci cations/pin assignments

2.3.1 P3 — AC power (3-pin Euro AC)

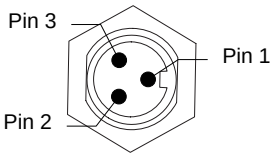

Pin #	Function	Description
1	Earth	Chassis (earth) ground
2	Line	AC line
3	Neutral	AC neutral

Table 2.7 P3 DC power, 2-pin locking wire crimp

Connectivity Options
Cordset
Straight MD-CS200-000
Right-angle: MD-CS201-000

2.3.2 Logic, communications and optional encoder — 19-pin M23

⚠ CAUTION

+5VDC OUTPUT

The +5 VDC output on connector P1 is for the express purpose of powering the IMS isolated communications converter cables. Do not use to power external devices.

Failure to follow these instructions may result in damage to system components!

Outside: Pins 1 -12

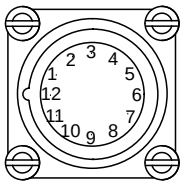

Inside: Pins 13 -19

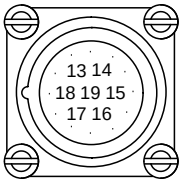

Connectivity Options
USB to SPI Converter:
MD-CC301-001

Prototype development cable:
MD-CS100-000 (straight)
MD-CS101-000 (right-angle)

Pin #	Function	Description
1	Opto Reference	The signal applied to the optocoupler reference will determine the sinking/ or sourcing configuration of the inputs. To set the inputs for sinking operation, a +5 to +24 VDC supply is connected. If sourcing, the reference is connected to ground
2	Enable	Enable/disable input will enable or disable the driver output to the motor. In the disconnected state the driver outputs are enabled in either sinking or sourcing configuration. Can be configured as active high or active low.
3	IDX+	Encoder index + output.
4	CH B+	Encoder channel B+ output.
5	CH B-	Encoder channel B- output.
6	N/C	Not connected
7	CH A+	Encoder channel A+ output.
8	MOSI	Master-out/slave-in. Carries output data from the SPI Master to the MDO.
9	CS	SPI chip select. This signal is used to turn communications on multiple MDM units on or off.
10	+5 VDC Output	Supply voltage for the MD-CC301-000 Converter Cable ONLY!
11	N/C	Not connected
12	Connector Shell	Connector shell,
13	Direction/ Channel B/ Clock Down	Direction input. The axis direction will be with respect to the state of the direction override parameter. It may also receive quadrature and clock up type inputs if so configured.
14	IDX-	Encoder index - output
15	CH A-	Encoder channel A - output
16	SPI Clock	The clock is driven by the SPI Master. The clock cycles once for each data bit.
17	MISO	Master-in/slave-out. Carries output data from the MDM back to the SPI Master.
18	Step Clock/ Channel A/ Clock Up	Step clock input. The step clock input will receive the clock pulses which will step the motor 1 step for each pulse. It may also receive quadrature and clock up type inputs if so configured.
19	GND	Power ground

Table 2.8 P1 Power, logic, communications and optional encoder

2.4 Connectivity

QuickStart kit

For rapid design veri cation, all-inclusive QuickStart Kits have communication converter, prototype development cable(s), instructions and CD for MDrive AccuStep initial functional setup and system testing.

Communication Converters

Electrically isolated, in-line converters pre-wired with mating connectors to conveniently set/program communication parameters for a single MDrive product via a PC's USB port. Length 12.0' (3.6m).

Mates to connector:

P1 19-pin M23 circular..... MD-CC301-001

Prototype Development Cables

Speed test/development with pre-wired mating connectors that have ying leads other end. Length 10.0' (3.0m).

Mates to connector:

P1 19-pin M23 (straight)..... MD-CS100-000

P1 19-pin M23 (right-angle)..... MD-CS101-000

P3 Euro AC (straight) MD-CS200-000

P3 Euro AC (right-angle) MD-CS201-000

2.5 Options

Internal Encoder

Internal differenti4l magnetic encoders with index mark are available with the MDrive 34AC Microstepping.

Line counts available: 100, 200, 250, 256, 400, 500, 512, 1000

Control Knob

The MDrive 34AC is available with a factory-mounted rear control knob for manual shaft positioning.

Planetary Gearbox

Ef cient, low maitenance planetary gearboxes are offered assembled with the MDrive 34AC.

3 Connection and interface

⚠ DANGER

EXPOSED SIGNALS

Hazardous voltage levels may be present if using an open frame power supply to power the product.

Failure to follow these instructions will result in death or serious injury.

⚠ CAUTION

HOT PLUGGING

Do not connect or disconnect power, logic, or communications while the device is in a powered state.

Failure to follow these instructions can result in equipment damage.

3.1 Interfacing communications

SPI communications may be interfaced using one of two possible connector options:

1. 19-pin M23 circular connector at P1



For general SPI communications methods and practices please see Part 1, Section 5 of this document.

3.1.3 P1 - 19-pin M23 circular connector

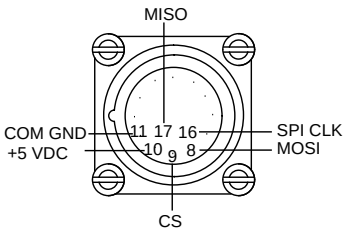

Pin #	*Signal*	*IMS cable wire colors*	
		MD-CC301-001	MD-CS10x-000
7	+ 5 VDC output	—	White/gray
8	SPI clock	—	Yellow
9	Comm ground	—	Black
10	SPI MOSI	—	White/green
11	SPI chip select	—	White/yellow
12	SPI MISO	—	Pink

Table 3.1 SPI communications, 19-pin M23 circular

A mating connector kit is not available for this connector. Shop for compatible connectors at:

- Lumberg
- Phoenix
- Turck
- RDE Connectors

3.2 Interfacing AC power

3.2.1 P3 — 3-pin Euro AC

3-Pin Euro AC Connector

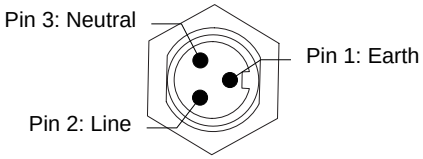

Pin number	Signal	European (IEC) color code
1	Earth	Yellow/Green
2	Line	Brown
3	Neutral	Blue

Table 3.2 AC standard wire colors

The single-end three conductor cordsets are used with the MDrive AC. Measuring 13.0’ (3.0m) long, they are available in either straight or right angle termination. IEC color code, oil-resistant yellow PVC jacket, IP68 and NEMA 6P rated.

Straight Termination MD-CS200-000

Right Angle Termination MD-CS201-000

3.3 Interfacing AC power

43.1 P1 — 19-pin M23 circular connector

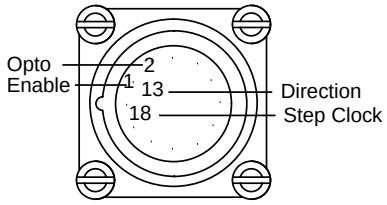

Pin #	*Signal*	*IMS cable wire colors*	
		MD-CC301-001	MD-CS10x-000
1	Opto reference	Violet	Violet
18	Step clock input	Gray/brown	Gray/brown
2	Enable input	Red	Red
13	Direction input	Yellow/brown	Yellow/brown

Table 3.3 Universal input connections, 12-pin locking wire crimp

A mating connector kit is not available for this connector. Shop for compatible connectors at:

- Lumberg
- Phoenix
- Turck
- RDE Connectors

3.4 Encoder interface

3.3.1 P1 — 19-pin M23 circular connector

Pin #	*Signal*	*IMS cable wire colors*	
		MD-CC301-001	MD-CS10x-000
3	Index +	Gray	Gray
4	Channel B +	Red/blue	Red/blue
5	Channel B -	Green	Green
7	Channel A -	Gray/pink	Gray/pink
14	Index -	Brown/green	Brown/green
15	Channel A +	White	White
19	Ground	Brown	Brown

Table 3.4 Encoder interface - 19-pin M23 circular connector

A mating connector kit is not available for this connector. Shop for compatible connectors at:

- Lumberg
- Phoenix
- Turck
- RDE Connectors

3.4 USB to SPI communications converters

3.3.1 USB to 19-pin M23 circular — MD-CC301-001

Electrically isolated in-line USB to SPI converter pre-wired with mating connector to conveniently program and set con guration parameters. Power and logic signals are bundled into this connector via a second cable with signal accessibility via ying leads.

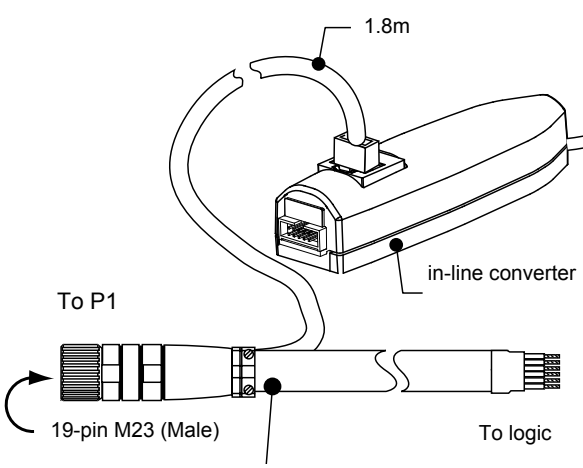

Wire Colors	Function
Violet	Opto Ref.
Red	Enable
Blue	+V*
Black	Comm GND
Green/Yellow	Shell
Yellow/Brown	Direction
Gray/Brown	Step Clock
Brown	Power GND*
Optional internal encoder	
Gray	Index +
Red/blue	Channel B +
Green	Channel B -
Gray/pink	Channel A -
Brown/green	Index -
White	Channel A +

Figure 3.1 MD-CC301-001 communications converter

3.5 Prototype development cables

3.5.1 P3 — 3-pin Euro AC

The single-end three conductor cordsets are used with the MDrive AC. Measuring 13.0' (3.0m) long, they are available in either straight or right angle termination. IEC color code, oil-resistant yellow PVC jacket, IP68 and NEMA 6P rated.

Straight Termination MD-CS200-000

Right Angle Termination MD-CS201-000

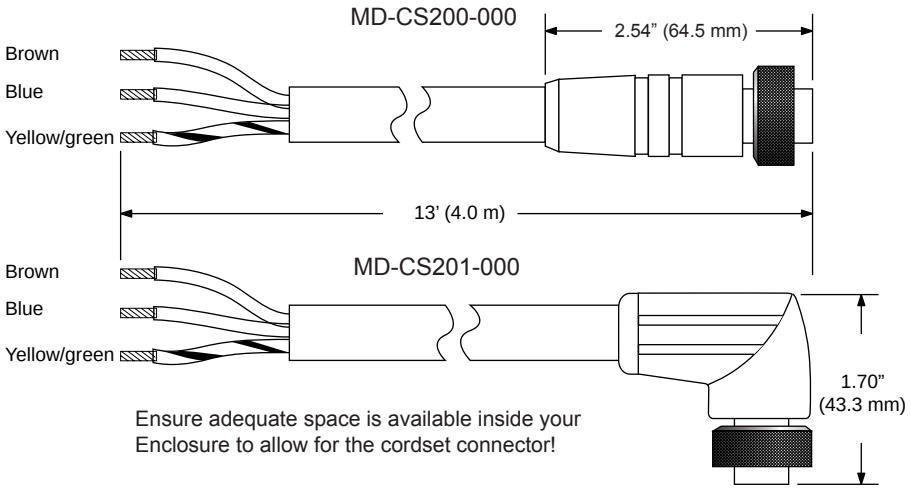

Figure 3.2 MD-CS20x-000

3.5.2 P2 — 19-pin M23 circular connector MD-CS10x-000

The MD-CS10x-000 prototype development cordset is used to rapidly interface the MDrive to the users power, communications and logic interface. This 13' (3.0 m) cable consists of a 119-pin M23 circular connector to plug directly into the MDrive P1 connector with ying leads on the opposite end to interface to power, communications and logic.

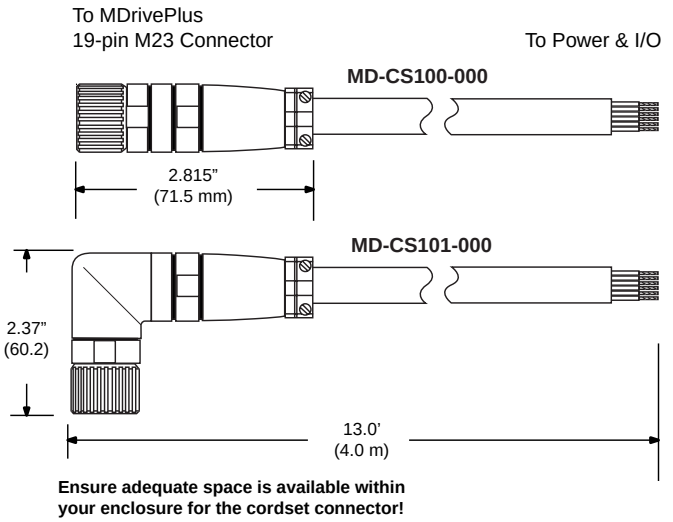

Wire Colors	Function
Violet	Opto Ref.
Red	Enable
Blue	Not connected
White/Green	MOSI
White/Yellow	CS
White/Gray	+5 VDC
Black	Comm GND
Green/Yellow	Shell
Yellow/Brown	Direction
Yellow	SPI Clock
Pink	MISO
Gray/Brown	Step Clock
Brown	Not connected
Optional internal encoder	
Gray	Index +
Red/blue	Channel B +
Green	Channel B -
Gray/pink	Channel A -
Brown/green	Index -
White	Channel A +

Figure 3.3 MD-CS10x-000 prototype development cordset

MDrive® Linear Actuator Microstepping

Part 3: Detailed Speci cations and Connectivity Information

1. MDrive 14 Linear Actuator
2. MDrive 17 Linear Actuator
3. MDrive 23 Linear Actuator

This page intentionally left blank

MDrive® 14 Linear Actuator

Microstepping

CE RoHS

1. Introduction
2. Speci cations
3. Mounting Recommendations
4. Interface and Connectivity

This page intentionally left blank

Table of Contents

1 Introduction 1-1
- 1.1 MDrive 14 linear actuator unit overview 1-1
  - 1.1.1 Linear actuator styles 1-1
  - 1.1.2 MDrive 14 linear versions 1-1
- 1.2 Product identi cation 1-2
- 1.3 Documentation reference 1-3
- 1.4 Product software 1-3

2 Speci cations 2-1
- 2.1.1 Non-captive shaft 2-1
- 2.1.2 External shaft 2-2
- 2.2 General speci cations 2-3
  - 2.2.1 Electrical speci cations 2-3
  - 2.2.2 Logic speci cations 2-3
  - 2.2.3 Communications speci cations 2-3
  - 2.2.4 Thermal speci cations 2-3
  - 2.2.5 Motion speci cations 2-4
  - 2.2.8 Motor speci cations 2-4
  - 2.2.9 Speed-force performance curves 2-5
- 2.3 Connectivity speci cations/pin assignments 2-6
  - 2.3.1 P1 — Power, communications and logic (universal inputs) 2-6
  - 2.3.1 P1 — Power, communications and logic (differential inputs) 2-7
  - 2.3.2 P2 —- Internal magnetic encoder (differential) ... 2-8
- 2.4 Options 2-9
- 2.5 Connectivity 2-9

3 Mounting and connection recommendations 3-1
- 3.1 Mounting 3-2
- 3.2 Layout and interface guidelines 3-3
  - 3.2.1 Recommended Wiring 3-3
  - 4.2.2 Securing cabling 3-4
- 3.5 Anti-Backlash nut assembly and installation 3-5
  - 3.5.1 Notes and warnings 3-5
  - 3.5.2 Installation 3-5
  - 3.5.3 Removal from screw 3-5
  - 3.5.4 Assembly procedure 3-6

4 Connection and interface 4-1
- 4.1 Interfacing communications 4-1
  - 4.1.1 P1 — 12--pin wire crimp connector 4-2
- 4.3 Interfacing DC power 4-3
  - 4.3.1 Recommended power supply characteristics 4-3
  - 4.3.2 Recommended wire gauge 4-3
  - 4.3.3 P1 — 12-pin locking wire crimp interface 4-4
  - 4.3.4 Power Interface using Drive Protection Module DPM75 4-4
- 4.4 Interfacing Logic (universal input) 4-5
  - 4.4.1 P1 — 12-pin locking wire crimp 4-5
- 4.5 Interfacing Logic (differential inputs) 4-6
  - 4.5.3 P1 — 12-pin locking wire crimp 4-6

Revision R031910

4.6 Optional encoder interface 4-7
4.7 Connectivity accessory details 4-8
4.7.1 USB to SPI communications converter cables .. 4-8
4.7.2 PD12B-3400-FL3 prototype development cable 4-8
4.7.3 Mating connector kits 4-8

List of Figures

Figure 1.1 Standard product options 1-2
Figure 2.1 Non-captive shaft mechanical speci cations 2-1
Figure 2.2 External shaft mechanical speci cations 2-2
Figure 2.3 Performance curves 2-5
Figure 3.1 MDrive 14 linear actuator mounting and drill pattern 3-2
Figure 3.2 Securing leads 3-4
Figure 3.3 Insert spring tang 3-6
Figure 3.4 Spring engaged 3-6
Figure 3.5 Insert opposite tang 3-6
Figure 3.6 Inserting the back nut 3-7
Figure 3.7 Measuring the gap distance 3-7
Figure 3.8 Pre-loading the nut 3-8
Figure 3.9 Nut pre-loaded and fully assembled 3-8
Figure 4.1 DPM75 Drive Protection Module 4-4
Figure 4.2 MD-CC305-001 USB to SPI converter cable 4-8
Figure 4.3 Prototype development cable PD12B-1435-FL3 4-8

List of Tables

Table 2.1	Electrical speci cations	2-3
Table 2.2	I/O speci cations	2-3
Table 2.3	Communications speci cations	2-3
Table 2.4	Thermal speci cations	2-3
Table 2.5	Motion speci cations	2-4
Table 2.8	Actuator speci cations	2-4
Table 2.9	P1 — Power, communications and logic, 12-pin locking wire crimp	2-6
Table 2.10	P1 — Power, communications and logic, 12-pin locking wire crimp	2-7
Table 2.11	P2 — Internal encoder option	2-8
Table 4.1	Communications connections, P1 - 12-pin wire crimp	4-2
Table 4.2	Recommended power supply characteristics	4-3
Table 4.3	Recommended power supply wire gauge	4-3
Table 4.4	Power and ground connections, 12-pin locking wire crimp	4-4
Table 4.5	Universal input connections, 12-pin locking wire crimp	4-5
Table 4.6	Differential input connections, 12-pin locking wire crimp	4-6
Table 4.7	P2 - Optional encoder interface	4-7

Revision R031910

Page intentionally left blank

1 Introduction

The **MDrive® 14 Linear Actuator Microstepping** high torque integrated motor and step and direction driver is ideal for designers who want the simplicity of a motor with on-board electronics. The integrated electronics of the MDrive 14 Linear Actuator eliminate the need to run motor cabling through the machine, reducing the potential for problems due to electrical noise.

1.1 MDrive 14 linear actuator unit overview

1.1.1 Linear actuator styles

Two (2) linear actuator styles of MDrive 14 integrated motor + driver solutions are available:

- **Non-captive shaft** — a screw runs through the MDrive and moves axially as the motor rotates
- **External shaft** — a rotating screw, integral to the motor shaft, moves a screw-mounted nut axially

Precision rolled lead screws used with MDrive linear actuators are designed speci cally for motion control applications to deliver maximum life and quiet operation. Corrosion resistant and non-magnetic, screws are manufactured from premium grade stainless steel and available with optional coating.

1.1.2 MDrive 14 linear versions

Three (2) MDrive 14 integrated versions provide a choice of features and capabilities:

- **Microstepping** — motor + driver
- **Motion Control** — motor + driver + controller

MDrive 14 linear actuators feature high torque 1.8° brushless NEMA 14 single length step motors with integrated electronics, providing the leading technology solution for all-in-one linear motion applications.

Unsurpassed smoothness and performance delivered by MDrive 14 products are achieved through IMS's advanced 2nd generation current control. By applying innovative techniques to control current ow through the motor, resonance is signi cantly dampened over the entire speed range and audible noise is reduced.

The MDrive 14 accepts a broad input voltage range from +12 to +48 VDC, delivering enhanced performance and speed. Oversized input capacitors are used to minimize power line surges, reducing problems that can occur with long cable runs and multiple drive systems. An extended operating range of –40° to +85°C provides long life, trouble free service in demanding environments.mapping and extended node identi er.

Motor con gurations include a single shaft rotary in four lengths, and linear actuators with long life Acme screw**.

Revision R031910

1.2 Product identi cation



P1

I/O, power & communication connector:

C = locking wire crimp
(separate Comm connector on Plus² versions)

P2

Communication connectors Plus² versions only:

L = 10-pin locking wire crimp
B = DB9, only with CANopen Comm

Microstepping version

P1

MLM [1,5] [C] **S Z14A4** – E [ ] M – **L** [linear actuator]

[1,5] Input version
1 = Universal - standard
5 = Differential - CW/CCW

[S] SPI comm

Optional encoder
For NO encoder, omit any –E specification from part number

Internal magnetic differential encoder with index mark.

Line count / part#	
100 / EAM	500 / EHM
200 / EBM	512 / EXM
250 / ECM	800 / EFM
256 / EWM	1000 / EJM

See details at bottom of page for complete linear actuator part numbers.

Linear actuator styles



Non-captive shaft

– L [ ] 1 [ ] [ ] [ ] [ ] Z [ ]

[1] Screw lead
travel per rev
A = 0.250" (6.35mm)
B = 0.125" (3.175mm)
C = 0.063" (1.588mm)
D = 0.031" (0.794mm)

[ ] Screw end
M = metric
U = UNC
S = smooth
Z = none

[ ] Screw length
3.0 to 18.0"
in 0.1 increments
ex. 12.5" = 125
10.0" = 100

[Z] Coating
T = teflon*
Z = none

Screw length calculation = desired stroke length + 1.40" (35.56mm) + mounting surface plate thickness

*Contact factory for availability.



External shaft

– L [ ] 3 [ ] [ ] [ ] [ ] [ ] [ ]

[ ] Screw lead
travel per rev
A = 0.250" (6.35mm)
B = 0.125" (3.175mm)
C = 0.063" (1.588mm)
D = 0.031" (0.794mm)

[ ] Screw end
M = metric
U = UNC
S = smooth
Z = none

[ ] Screw length
3.0 to 18.0"
in 0.1 increments
ex. 12.5" = 125
10.0" = 100

[ ] Nut
G = general purpose (dynamic load limit to 25lbs/11kg)
A = anti-backlash (dynamic load limit to 5lbs/2kg)

[ ] Coating
T = teflon*
Z = none

Screw length calculation = desired stroke length + nut length + mounting surface plate thickness

Figure 1.1 Standard product options

1.3 Documentation reference

The following User's manuals are available for the MDrive 14 Linear Actuator Microstepping:

- Product manual, describes the technical data, installation, con- guration and programming of the product.
- Quick Reference, describes the basic wiring, connection and use of this product. The quick reference is shipped in printed form with the product.

This documentation is also available for download from the IMS web site at http://www.imshome.com

1.4 Product software

The MDrive 14 Linear Actuator Microstepping integrated motor and driver is con gured using the SPI motor interface graphical user interface. This free software may be downloaded from http://www.imshome.com/software_interfaces.html.

Installation and usages instructions are to be found in Part 1 of this document, Section 5.

Page intentionally left blank

2 Speci cations

2.1.1 Non-captive shaft

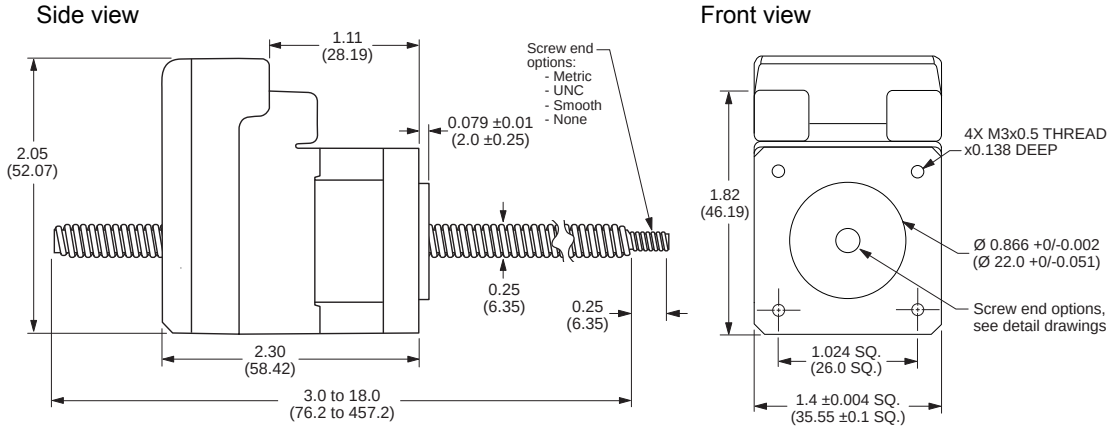

Load limit

Nominal load limit: 50 lbs (22 kg)*

*Screw D: 10 lbs (4.5 kg). Heavier loads will degrade screw life. Consult factory for alternatives.

Screw speci cations

Screw material

MDrive Linear Actuator precision rolled lead screws are designed speci cally for motion control applications to deliver maximum life and quiet operation. Corrosion resistant and non-magnetic, screws are manufactured from premium grade stainless steel.

Screw coating

An optional te on screw coating is available for smooth operation and extended life.

Standard screw

Dimensions in inches (mm)

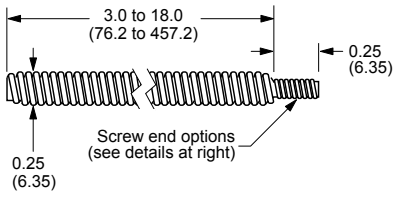

Lead options

inches (mm)	travel per revolution	travel per full step
Screw A	0.250 (6.350)	0.00125 (0.0317)
Screw B	0.125 (3.175)	0.00063 (0.0158)
Screw C	0.063 (1.588)	0.00031 (0.0079)
Screw D	0.031 (0.794)	0.00016 (0.0040)

Screw end options

Threaded end	Metric end: M4 x 0.7mm thread to within 0.03" (0.76mm) of shoulder	UNC end: #8-32 UNC-2A thread to within 0.03" (0.76mm) of shoulder
Smooth end	Ø 0.1967" ±0.001 (Ø 5mm ±0.003)	
None	–	

Cantilevered loads

Unsupported loads and side loading are not recommended for non-captive shaft MDrive® linear actuator products.

Calculating screw length

Screw length = [mounting surface plate thickness] + [1.40" (35.56mm)] + [desired stroke length]

Figure 2.1 Non-captive shaft mechanical speci cations

2.1.2 External shaft

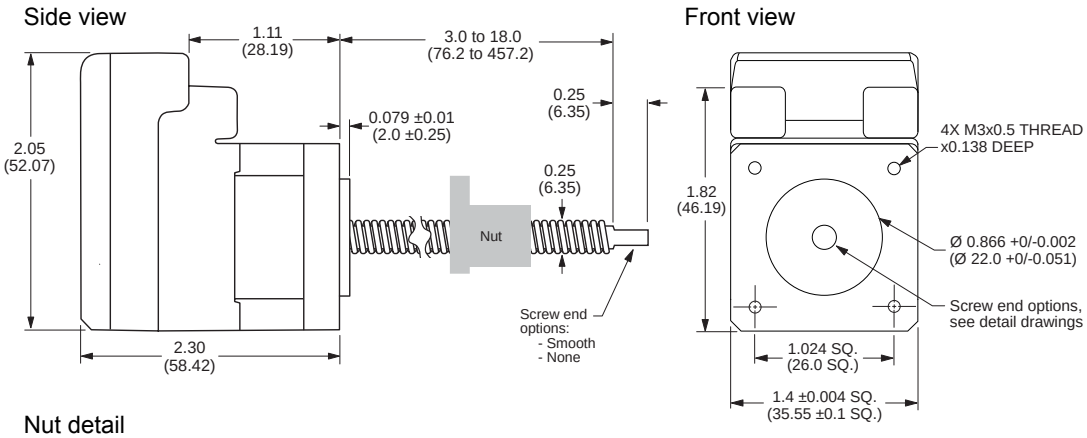

General purpose nut
Flange shape: round
Load limit: 25 lbs (11 kg)
Purpose: for applications not requiring anti-backlash and wear compensation.

Anti-backlash nut
Flange shape: triangle
Load limit: 5 lbs (2 kg)
Purpose: backlash free operation for high accuracy and low drag torque.

inches (mm)	A	B	D	E	F	BCD	*load limit*	*drag torque*
General purpose	0.50 (12.7)	0.75 (19.1)	1.0 (25.4)	0.14 (3.6)	0.15 (3.81)	0.75 (19.1)	25lbs/ 11 kg	free wheeling
Anti-backlash	0.50 (12.7)	0.9max (22.86)	1.0 (25.4)	0.143 (3.63)	0.18 (4.57)	0.75 (19.1)	5lbs/ 2 kg	< 1.0 oz-in < 0.7 N-cm

Screw speci cations

Screw material
MDrive Linear Actuator precision rolled lead screws are corrosion resistant and non-magnetic, manufactured from premium grade stainless steel.

Screw coating
An optional te on screw coating is available for smooth operation and extended life.

Standard screw
Dimensions in inches (mm)

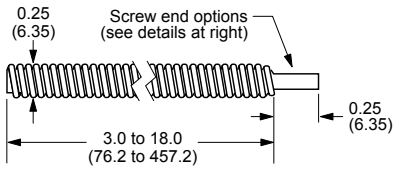

Lead options

inches (mm)	travel per revolution	travel per full step
Screw A	0.250 (6.350)	0.00125 (0.0317)
Screw B	0.125 (3.175)	0.00063 (0.0158)
Screw C	0.063 (1.588)	0.00031 (0.0079)
Screw D	0.031 (0.794)	0.00016 (0.0040)

Screw end options

Threaded end	Metric end: M4 x 0.7mm thread to within 0.03" (0.76mm) of shoulder	UNC end: #8-32 UNC-2A thread to within 0.03" (0.76mm) of shoulder
Smooth end	Ø 0.1967" ±0.001 (Ø 5mm ±0.003)	
None	—	

Cantilevered loads
Loads for external shaft MDrive® linear actuator products MUST BE supported. Side loading is not recommended.

Calculating stroke length
Available stroke length = [screw length] – [nut length] – [mounting surface plate thickness]

Figure 2.2 External shaft mechanical speci cations

2.2 General speci cations

2.2.1 Electrical speci cations

	Condition	Min	Typ	Max	Unit
Input voltage range	—	+12	—	+48	VDC
Max power supply current	—	—	—	1.0*	A

**per MDrive 14 Linear Actuator, Actual current depends on voltage and load.*

Table 2.1 Electrical speci cations

2.2.2 Logic speci cations

	Condition	Min	Typ	Max	Unit
Universal Inputs					
Isolated input voltage range (sourcing or sinking)	Isolated inputs	+5	—	+24	VDC
Current	+5 VDC max	—	—	8.7	mA
Current	+24 VDC max	—	—	14.6	mA
Differential Inputs					
Voltage range	—	0	—	+5	VDC
High level input voltage	—	+3.75	—	+5.75	VDC
Low level input voltage	—	—	—	≤+1.2	VDC

Table 2.2 I/O speci cations

2.2.3 Communications speci cations

Protocol	SPI

Table 2.3 Communications speci cations

2.2.4 Thermal speci cations

		Min	Typ	Max	Unit
Heat sink temperature	non-condensing humidity	-40	—	+85	ºC
Motor temperature	non-condensing humidity	-40	—	+100	ºC

Table 2.4 Thermal speci cations

2.2.5 Motion speci cations

Number of microstep resolutions	20

Available microsteps per revolution

200	400	800	1000	1600	2000	3200	5000	6400	10000
12800	20000	25000	25600	40000	50000	51200	36000[1]	21600[2]	25400[3]

1=0.01 deg/µstep 2=1 arc minute/µstep *3=0.001 mm/µstep
** 1" per revolution lead screw*

Digital filter range	50 ns to 12.9 µs (10 MHz to 38.8 kHz)
Clock types	step/direction, up/down, quadrature
Step frequency (max)	5 MHz
Step frequency minimum pulse width	100 ns

Table 2.5 Motion speci cations

2.2.8 Motor speci cations

Holding torque		18 oz-in (13 N-cm)
Rotor inertia		0.0003 oz-in-sec^2 (0.021 kg-cm2)
Maximum thrust (Non-captive)	General purpose	50 lbs (22 kg)
	With anti-backlash nut	—
Maximum thrust (External)	General purpose	25 lbs (11 kg)
	With anti-backlash nut	5 lbs (2 kg)
Maximum repeatability (Non-captive)	General purpose	0.005" (0.127 mm)
	With anti-backlash nut	—
Maximum repeatability (External)	General purpose	0.005" (0.127mm)
	With anti-backlash nut	0.0005" (0.0127 mm)
Maximum screw misalignment		± 1°
Wieght without screw		8.0 oz (230.0 g)

Table 2.8 Actuator speci cations

2.2.9 Speed-force performance curves

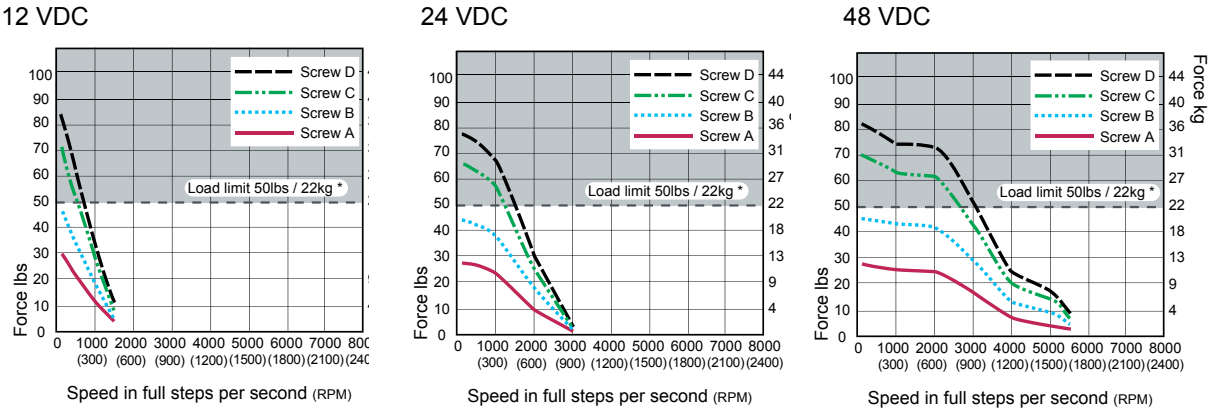

*For non-captive shaft linear actuators. Load limit for external shaft linear actuators is determined by selected nut.

Figure 2.3 Performance curves

2.3 Connectivity speci cations/pin assignments

2.3.1 P1 — Power, communications and logic (universal inputs)

⚠ CAUTION

+5VDC OUTPUT

The +5 VDC output on connector P1 is for the express purpose of powering the IMS isolated communications converter cables. Do not use to power external devices.

Failure to follow these instructions may result in damage to system components!

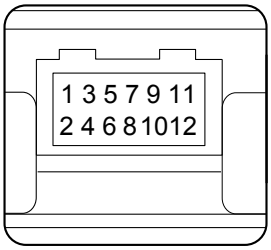

Connectivity Options
USB to SPI Converter:
MD-CC305-001

Mating connector kit:
CK-08

Mfg P/N:
Shell
JST PADP-12V-1-S

Pins
JST SPH-001T0.5L

Pin #	Function	Description
1	GND	Motor power supply return (ground)
2	+V	+12 to +48 VDC motor power supply input
3	OPTO	Optocoupler power supply input
4	SCLK	Step Clock input
5	EN	The Enable Input can be used to enable or disable the driver output circuitry.
6	DIR	The direction Input controls the clockwise/ counterclockwise direction of the motor. It may be configured as sinking or sourcing depending on the state of the Optocoupler Reference.
7	+5 VDC	+5 VDC output. This output is only to be used to power the optional communications converter cable MD-CC305-001. Do not use to power external devices.
8	CLK	SPI Clock
9	CGND	Communications ground
10	MOSI	SPI Master In - Slave Out
11	CS	SPI Chip Select input
12	MISO	SPI Master In - Slave Out

Table 2.9 P1 — Power, communications and logic, 12-pin locking wire crimp

2.3.1 P1 — Power, communications and logic (differential inputs)

⚠ CAUTION

ELECTRICAL OVERSTRESS

The universal logic inputs are tolerant to +24 VDC. The differential input version inputs are TTL level and only tolerent to +5 VDC:

Do not exceed +5 VDC on the differential inputs.

Failure to follow these instructions can result in equipment damage.

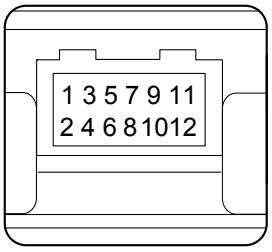

Connectivity Options
USB to SPI Converter:
MD-CC305-001

Mating connector kit:
CK-08

Mfg P/N:
Shell
JST PADP-12V-1-S

Pins
JST SPH-001T0.5L

Pin #	Function	Description
1	GND	Motor power supply return (ground)
2	+V	+12 to +48 VDC motor power supply input
3	CW+	Clockwise plus direction input.
4	CW —	Clockwise minus direction input.
5	CCW+	Counter-clockwise plus direction input.
6	CCW-	Counter-clockwise minus direction input.
7	+5 VDC	+5 VDC output. This output is only to be used to power the optional communications converter cable MD-CC305-001. Do not use to power external devices.
8	CLK	SPI Clock
9	CGND	Communications ground
10	MOSI	SPI Master In - Slave Out
11	CS	SPI Chip Select input
12	MISO	SPI Master In - Slave Out

Table 2.10 P1 — Power, communications and logic, 12-pin locking wire crimp

2.3.2 P2 —- Internal magnetic encoder (differential)

P2 is only present if the internal encoder option is selected.

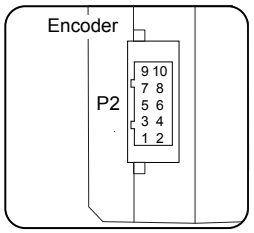

Connectivity Options
Prototypre development cable:
PD10-3400-FL3

Mating connector kit:
CK-02

Mfg P/N:
Shell
Hirose DF11-2428SC

Pins
Hirose DF11-TA2428HC

Pin #	Function	Description
1	GND	Encoder ground
2	CH A+	Channel A positive input
3	CH A-	Channel A negative input
4	CH B+	Channel B positive input
5	CH B-	Channel B negative input
6	IDX+	Index mark positive input
7	IDX-	Index mark negative input
8	N/C	Not connected
9	N/C	Not connected
10	N/C	Not connected

Table 2.11 P2 — Internal encoder option

2.4 Options

Drive Protection Module

The function of the DPM75 Drive Protection Module is to limit the surge current and voltage to a safe level when DC input power is switched on and off to a motor drive.

Internal Encoder

Internal differential magnetic encoders with index mark are available with the MDrive 14 Linear Actuator Microstepping.

Line counts available: 100, 200, 250, 256, 400, 500, 512, 1000

Differential Locking Cable (10.0'/3.0m) PD10-3400-FL3

Differential Inputs

Changes the clock and direction inputs to differential +5 VDC inputs.

Refer to details and part numbers in Appendix D of this document.

2.5 Connectivity

QuickStart Kit

For rapid design veri cation, all-inclusive QuickStart Kits have communication converter, prototype development cable(s), instructions and CD for MDrive Linear Actuator initial functional setup and system testing.

Parameter Setup Cable

The optional 12.0' (3.6m) parameter setup cable assembly with inline USB to SPI converter, part number MD-CC305-001, facilitates communications, power and logic wiring and is recommended with rst order.

Mating Connector Kits

Use to build your own cables. Kit contains 5 mating shells with pins. Cable not supplied. Manufacturer's crimp tool recommended.

Mates to connector:

12-Pin Wire Crimp CK-08

Encoder Cable

The following 10.0' (3m) interface cable is recommended with rst orders for MDrive 14 Linear Actuator with an internal encoder:

Internal Encoder: 10-Pin Cable PD10-3400-FL3

Page intentionally left blank

3 Mounting and connection recommendations

⚠ DANGER

EXPOSED SIGNALS

Hazardous voltage levels may be present if using an open frame power supply to power the product.

Failure to follow these instructions will result in death or serious injury.

⚠ CAUTION

SWITCHING DC POWER/HOT PLUGGING

Do not connect or disconnect power, logic, or communications while the device is in a powered state.

Remove DC power by powering down at the AC side of the DC power supply.

Failure to follow these instructions can result in equipment damage.

⚠ CAUTION

LEAD RESTRAINT

Some MDrive mounting con gurations require that the MDrive move along the screw. Ensure that all cabling is properly re-strained to provide strain relief on connection points..

Failure to follow these instructions can result in equipment damage.

⚠ CAUTION

THERMAL MANAGEMENT

The mounting plate material should offer suf cient mass and thermal conductivity to ensure that the motor temperature does not eceed 100°C.

Failure to follow these instructions can result in equipment damage.

⚠ CAUTION

SCREW MISALIGNMENT

Ensure that support for the screw is in place as to not exceed the maximum misalignment of ±1°.

Failure to follow these instructions can result in equipment damage.

Revision R031910

⚠ CAUTION

CANTILEVER LOADS

Loads for external shaft MDrive linear actuator products MUST BE supported. Side loading is not recommended.

Failure to follow these instructions can result in equipment damage.

3.1 Mounting

The maximum temperature for the MDrive 14 Linear Actuator is 85°C measured at the heat sink, 100°C measured at the motor. Ensure that the unit is mounted to adequate heat sink plating to ensure that the temperature does not exceed 85°C.

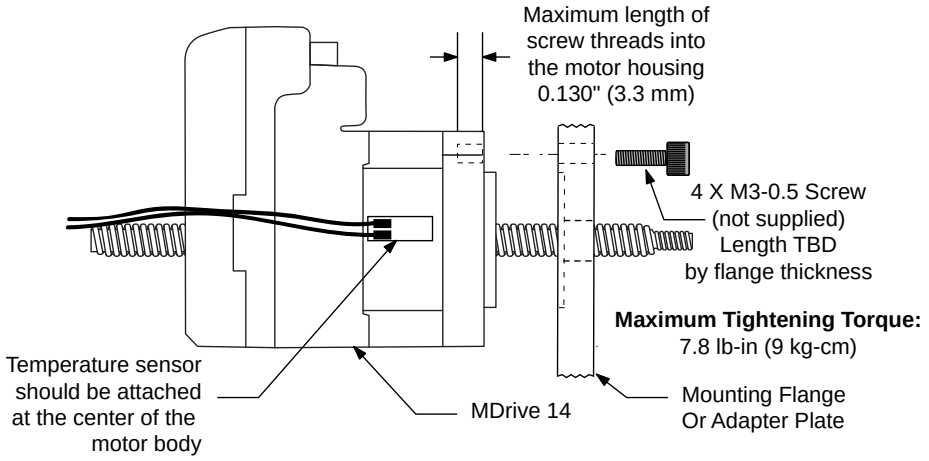

Drill Pattern for Mounting Flange or Adapter Plate

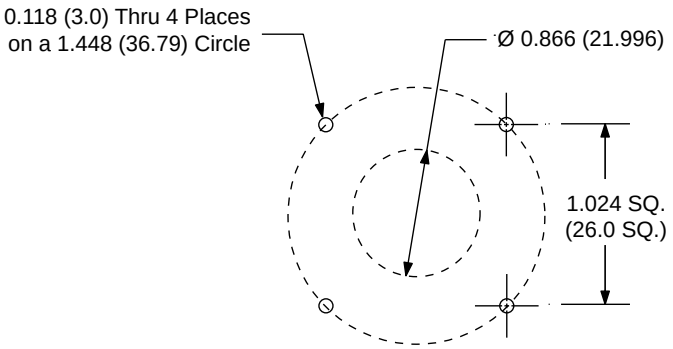

Figure 3.1 MDrive 14 linear actuator mounting and drill pattern

3.2 Layout and interface guidelines

⚠ DANGER

EXPOSED SIGNALS

Hazardous voltage levels may be present if using an open frame power supply to power the product.

Failure to follow these instructions will result in death or serious injury.

⚠ CAUTION

HOT PLUGGING!

Do not connect or disconnect power, logic, or communications while the device is in a powered state.

Remove DC power by powering down at the AC side of the DC power supply.

Failure to follow these instructions can result in equipment damage.

Logic level cables must not run parallel to power cables. Power cables will introduce noise into the logic level cables and make your system unreliable.

Logic level cables must be shielded to reduce the chance of EMI induced noise. The shield needs to be grounded at the signal source to earth. The other end of the shield must not be tied to anything, but allowed to oat. This allows the shield to act as a drain.

Power supply leads to the MDrive 14 Linear Actuator need to be twisted. If more than one MDrive is to be connected to the same power supply, run separate power and ground leads from the supply to each driver.

3.2.1 Recommended Wiring

The following wiring/cabling is recommended for use with the MDrive 14 Linear Actuator:

Logic Wiring..... 22 AWG

Wire Strip Length..... 0.25” (6.0 mm)

Power, Ground ..... 20 AWG

4.2.2 Securing cabling

Some applications may require that the MDrive move with the axis motion. If this is a requirement of your application, the motor leads must be properly anchored. This will prevent exing and tugging which can cause damage at critical connection points.

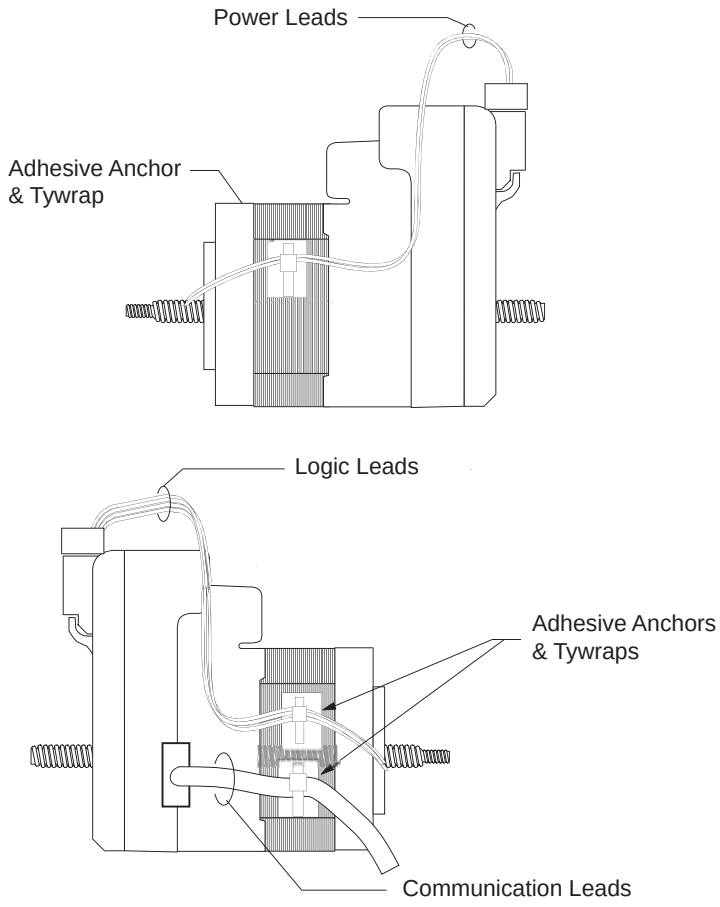

Figure 3.2 Securing leads

3.5 Anti-Backlash nut assembly and installation

3.5.1 Notes and warnings

- Do not use a wrench on the stainless steel cam of the nut.
- Do not oil the mechanism of the nut.
- Do not install the note into an interference t bore (mechanism will not work).

3.5.2 Installation

To install threaded model nuts, simply hand tighten until shoulder is ush with mounting surface. A small amount of Loctite thread compound such as #277 can be used to prevent loosening. Alternatively, a pin can be installed to mechanically lock the threads.

Flanged models can be mounted to either the front or rear face of the ange.

Before use, it is recommended that the stainless steel preload mechanism be turned so that the caming surfaces move down the ramps. Once play is felt, allow the mechanism to slowly unwind again to establish the proper preload. (It is possible in assembly to inadvertently twist the cam creating excessive drag torque. This procedure will correct this.)

Using lubricant on the lead screw threads is recommended. This extends the life of the nut and reduces heat generation, noise and vibration. TriGEL-300S or TriGEL-1200SC is recommended.

3.5.3 Removal from screw

If it is necessary to remove the nut from your screw, you may lock the mechanism so that it can be immediately reinstalled without re-setting the preload. This can be done by wrapping tape around the junction between the stainless steel cam and the plastic nut halves. This will prevent the cam from turning when the nut is removed from screw. Remember to remove tape after installation.

For immediate transfer from one screw to another, hold the nut together between your thumb and fore nger so that it cannot expand axially. Remove the nut and install it on the second screw. It may be helpful to prevent the cam from turning with your remaining ngers as you transfer. If the nut becomes disassembled or looses its preload for any reason, follow the steps listed in the assembly procedure below.

3.5.4 Assembly procedure

1) Insert spring tang into cam slot.

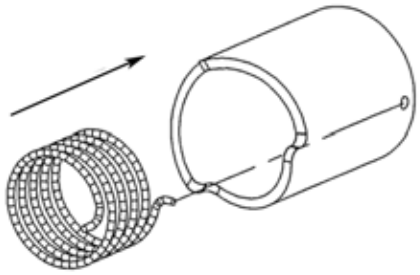

Figure 3.3 Insert spring tang

2) Ensure that the spring is engaged.

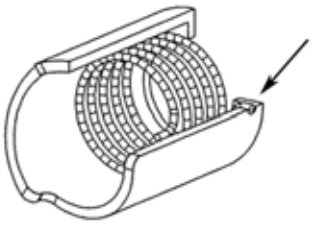

Figure 3.4 Spring engaged

3) Insert opposite tang into front nut slot or hole (dependant on size). Use the slot or hole that will allow the the cam to be positioned closest to the bottom of the ramp.

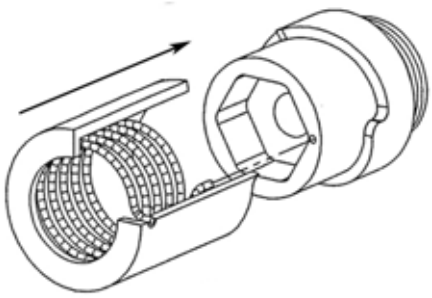

Figure 3.5 Insert opposite tang

1) With washer installed, insert the back nut into the front nut.

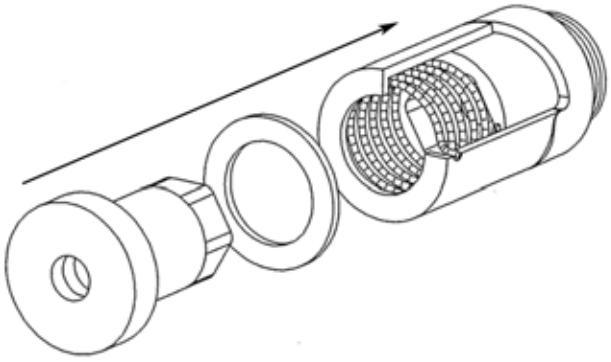

Figure 3.6 Inserting the back nut

2) With the cam held at the bottom of the ramp, thread the entire nut onto the screw starting with the front nut. After the entire nut is threaded onto the screw, release the cam to observe the gap distance (X on the drawing). The gap distance (X) should be about one-third of the full ramp distance, but no more than half.

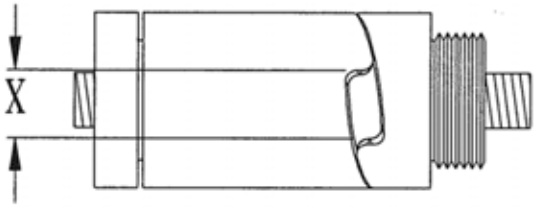

Figure 3.7 Measuring the gap distance

3) If the gap distance is incorrect, unthread the nut just enough to allow the back nut to disengage from the screw. Pull the back nut off and rotate to the next index position and reinsert back into the front nut. With the cam held at the bottom of the ramp, thread the entire nut back onto the screw. Release the cam and verify the correct gap distance. If still not correct repeat this step.

1) Once the back nut has been properly clocked to yield the correct gap distance, unthread the nut again just enough to disengage the back nut from the screw, but do not remove from the nut. Pull the cam away from the ramp and rotate in the clockwise direction for two ramp settings, then hold the cam at the bottom of the second ramp. Be careful not to allow the back nut to rotate with respect to the front nut while completing this task. With the cam held at the bottom of the second ramp, push the back nut into the front nut and thread the entire nut onto the screw.

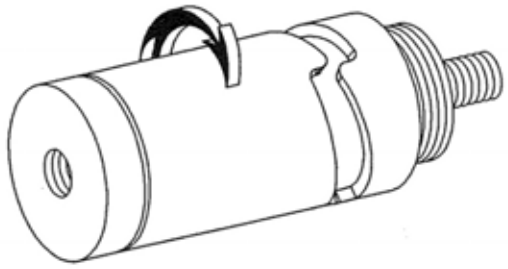

Figure 3.8 Pre-loading the nut

2) The anti-backlash nut is now pre-loaded and fully assembled.

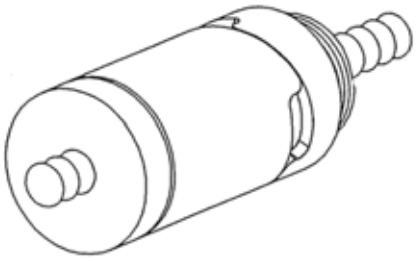

Figure 3.9 Nut pre-loaded and fully assembled

4 Connection and interface

⚠ DANGER

EXPOSED SIGNALS

Hazardous voltage levels may be present if using an open frame power supply to power the product.

Failure to follow these instructions will result in death or serious injury.

⚠ CAUTION

SWITCHING DC POWER/HOT PLUGGING

Do not connect or disconnect power, logic, or communications while the device is in a powered state.

Remove DC power by powering down at the AC side of the DC power supply.

Failure to follow these instructions can result in equipment damage.



Communications, DC power and logic are all interfaced using the 12-pin wire crimp connector at P1.

4.1 Interfacing communications



SPI communications may be interfaced using a 12-pin locking wire crimp connector at P1

For general SPI communications methods and practices please see Part 1, Section 5 of this document.

4.1.1 P1 — 12--pin wire crimp connector

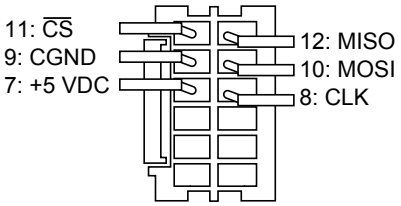

Pin #	Function	Description
7	+5V	+ 5 VDC output. Used to power the IMS communications converter ONLY! Not for general purpose use.
8	CLK	SPI clock
9	GND	Communications ground
10	MOSI	SPI master out - slave in
11	CS	SPI chip select, selected when low.
12	MISO	SPI master in - slave out

Table 4.1 Communications connections, P1 - 12-pin wire crimp

Connectivity accessories

Mating connector kit CK-08
(contains 5 connector shells and the appropriate quantity of pins to make 5 cables)

Prototype development cable (10'/3.0 m)..... PD12-1434-FL3

Communications converter cable (10'/3.0 m).....MD-CC305-001

Manufacturer (JST) part numbers

Connector shell..... PADP-10V010S

Pins..... SPH-001T0.5L

4.3 Interfacing DC power

See part 1 of this document, section 3, for recommended power cable con gurations.

> **⚠ CAUTION**
>
> OVER VOLTAGE
>
> The DC voltage range for the MDrive 14 Linear Actuator Microstepping is +12 to +48 VDC. Ensure that motor back EMF is factored into your power supply size calculations.
>
> Allow 2.0 A maximum power supply output current per MDrive 14 Linear Actuator in the system. Actual power supply current will depend on voltage and load.
>
> **Failure to follow these instructions can result in equipment damage.**

4.3.1 Recommended power supply characteristics

Voltage range	+12 to +48 VDC
Type	Unregulated linear
Ripple	± 5%
Output current	1.0 A (per MDrive 1

Table 4.2 Recommended power supply characteristics

4.3.2 Recommended wire gauge

1 Ampere (Peak)					
Length (Feet)	10	25	50*	75*	100*
Minimum AWG	20	20	18	18	16
2 Amperes (Peak)					
Length (Feet)	10	25	50*	75*	100*
Minimum AWG	20	18	16	14	14

Table 4.3 Recommended power supply wire gauge

4.3.3 P1 — 12-pin locking wire crimp interface

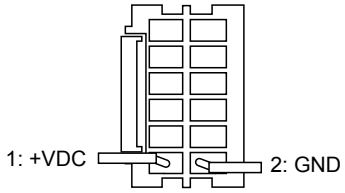

Pin #	*Signal*	*IMS cable wire colors*	
		MD-CC305-001	PD12B-14340-FL3
2	+12 to + 48 VDC	Red	See section 4.7.2 for wire colors.
1	Power ground	Black	

Table 4.4 Power and ground connections, 12-pin locking wire crimp

Connectivity accessories

Mating connector kit CK-08
(contains 5 connector shells and the appropriate quantity of pins to make 5 cables)

Prototype development cable (10'/3.0 m).....PD12B-1434-FL3

Communications converter cable (10'/3.0 m).....MD-CC305-001

Manufacturer (JST) part numbers

Connector shell.....PADP-12V-1-S

Pins..... SPH-001T0.5L

4.3.4 Power Interface using Drive Protection Module DPM75

The DPM75 Drive Protection Module will limit surge currents for up to three (3) MDrive 14 units at up to 48 VDC to allow switching DC Power.

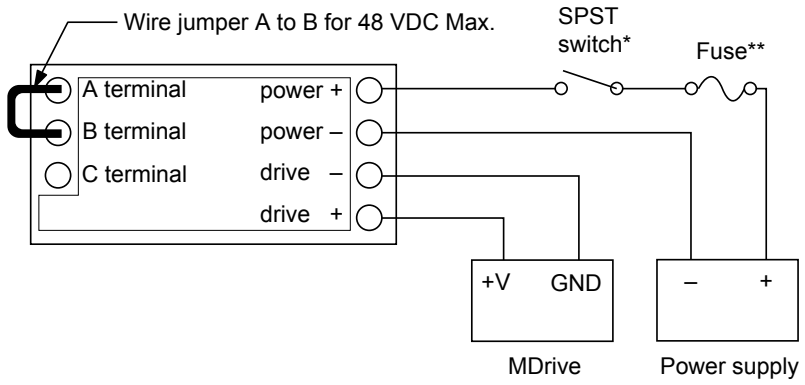

* Do not switch negative side of supply
**Fuse = 6.3 Amp slow blow (recommended: Bussman S505-6.3A or Littelfuse 215006.3). The fuse is optional.

Figure 4.1 DPM75 Drive Protection Module

4.4 Interfacing Logic (universal input)

See part 1 of this document, section 4, for logic interface con gurations and methods.

4.4.1 P1 — 12-pin locking wire crimp

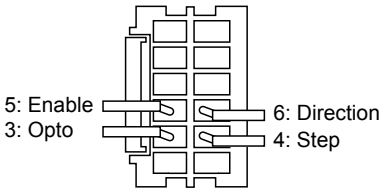

Pin #	*Signal*	*IMS cable wire colors*	
		MD-CC305-001	PD12B-1434-FL3
3	Opto reference	White	See section 4.7.2 for wire colors.
4	Step clock input	Green	
5	Enable input	Orange	
6	Direction input	Blue	

Table 4.5 Universal input connections, 12-pin locking wire crimp

Connectivity accessories

Mating connector kit CK-08
(contains 5 connector shells and the appropriate quantity of pins to make 5 cables)

Prototype development cable (10'/3.0 m)..... PD12B-1434-FL3

Communications converter cable (10'/3.0 m)..... MD-CC305-001

Manufacturer (JST) part numbers

Connector shell..... PADP-12V-1-S

Pins..... SPH-001T0.5L

4.5 Interfacing Logic (differential inputs)

⚠ CAUTION

ELECTRICAL OVERSTRESS

The universal logic inputs are tolerant to +24 VDC. The differential input version inputs are TTL level and only tolerant to +5 VDC:

Do not exceed +5 VDC on the differential inputs.

Failure to follow these instructions can result in equipment damage.

4.5.3 P1 — 12-pin locking wire crimp

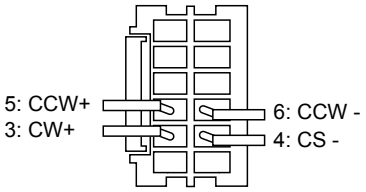

Pin #	*Signal*	*IMS cable wire colors*	
		MD-CC305-001	PD12B-1434-FL3
3	CW +	White	See section 4.7.2 for wire colors
4	CW —	Green	
5	CCW —	Orange	
6	CCW +	Blue	

Table 4.6 Differential input connections, 12-pin locking wire crimp

Connectivity accessories

Mating connector kit CK-08
(contains 5 connector shells and the appropriate quantity of pins to make 5 cables)

Prototype development cable (10'/3.0 m).....PD12B-1434-FL3

Communications converter cable (10'/3.0 m).....MD-CC305-001

Manufacturer (JST) part numbers

Connector shell.....PADP-12V-1-S

Pins..... SPH-001T0.5L

Revision R031910

4.6 Optional encoder interface

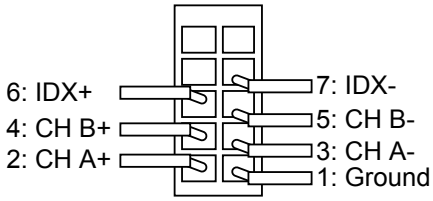

Pin #	*Signal*	*IMS cable wire color*
		PD10-3400-FL3
1	GND	White/Brown
2	CH A+	White/green
3	CH A-	Green/white
4	CH B+	White/orange
5	CH B-	Orange/white
6	IDX+	White/blue
7	IDX-	Blue/white
8-10	No Connect	

Table 4.7 P2 - Optional encoder interface

onnectivity accessories

Mating connector kit CK-02
(contains 5 connector shells and the appropriate quantity of pins to make 5 cables)

Manufacturer (Hirose) part numbers

Connector shell..... DF11-10DS-2C

Pins..... DF11-2428SC

4.7 Connectivity accessory details

4.7.1 USB to SPI communications converter cables

The MD-CC305-001 is an interface cable which combines Power, Logic and communications with an inline USB to SPI converter.

It is recommended with the rst purchase.

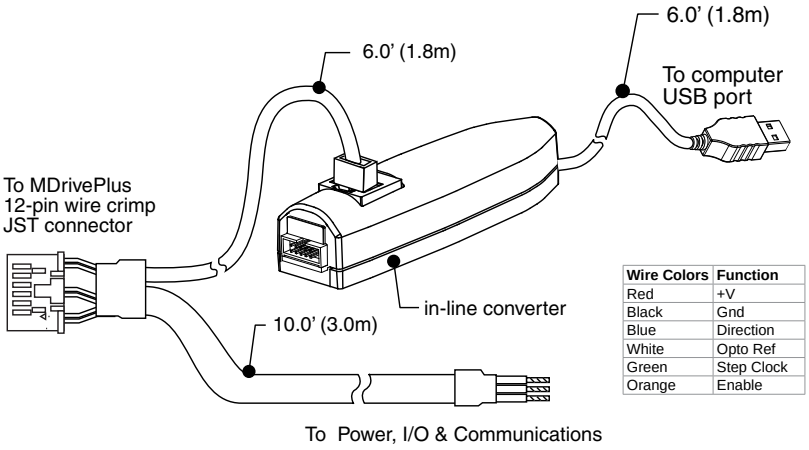

Wire Colors	Function
Red	+V
Black	Gnd
Blue	Direction
White	Opto Ref
Green	Step Clock
Orange	Enable

Figure 4.2 MD-CC305-001 USB to SPI converter cable

4.7.2 PD12B-3400-FL3 prototype development cable

Description: Pre-wired mating connector interfaces to an MDrive's 12-pin wire crimp connector, with ying leads other end, for quick test/ development.

Function: I/O, Power & Communications Interface.

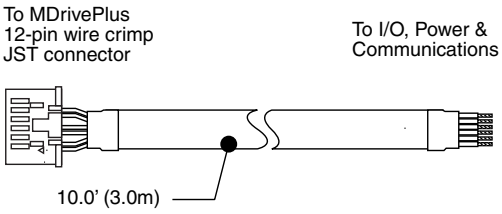

Pair	Wire Colors	Function
1	Black	GND
	Red	+V
2	Black	Comm GND
	White	MOSI
3	Black	CS
	Green	MISO
4	Black	Opto Ref
	Blue	+5 VDC Out
5	Black	Step Clock
	Yellow	Enable
6	Black	Direction
	Brown	SPI Clock

Figure 4.3 Prototype development cable PD12B-1435-FL3

4.7.3 Mating connector kits

Use to build your own cables. Kit contains 5 mating shells with pins. Cable not supplied. Manufacturer's crimp tool recommended.

Mates to connector:

P1 12-pin wire crimp.....CK-08

P2 10-pin wire crimp (encoder) CK-02

MDrive® 17 Linear Actuator

Microstepping

CE RoHS

1. Introduction
2. Speci cations
3. Mounting Recommendations
4. Interface and Connectivity

This page intentionally left blank

Table of Contents

1 Introduction 1-1
1.1 MDrive17 linear actuator unit overview 1-1
1.1.1 Linear actuator styles 1-1
1.1.2 MDrive17 versions 1-1
1.3 Product identi cation 1-2
1.3.1 Linear actuator options 1-2
1.4 Documentation reference 1-3
1.5 Product software 1-3
2 Speci cations 2-1
2.1 Mechanical speci cations 2-1
2.1.1 External shaft 2-1
2.1.1 Non-captive shaft 2-2
2.2 General speci cations 2-3
2.2.1 Electrical speci cations 2-3
3.2.2 Logic speci cations 2-3
3.2.3 Communications speci cations 2-3
3.2.4 Thermal speci cations 2-3
3.2.5 Motion speci cations 2-4
2.2.8 Actuator motor speci cations 2-4
2.2.9 Speed-force performance curves 2-4
2.3 Connectivity speci cations - Communications 2-6
2.3.1 SPI communications - connector P2 2-6
2.4 Connectivity speci cations - power and logic 2-7
2.4.1 Power and logic (universal inputs) 2-7
2.4.2 Power and logic (differential inputs) 2-8
2.4.3 Power, logic and comm (universal input) 2-9
2.4.4 Power, logic and comm (differential input) 2-10
2.5 Connectivity speci cations - internal encoder 2-11
2.5 Options 2-12
2.6 Connectivity 2-12
3 Mounting and connection recommendations 3-1
3.1 Mounting 3-2
3.2 Layout and interface guidelines 3-3
3.2.1 Rules of wiring 3-3
3.2.2 Rules of shielding 3-3
3.3 Recommended wiring 3-4
3.3.1 Recommended mating connectors and pins 3-4
3.4 Securing power leads and logic leads 3-4
4 Connection and interface 4-1
4.1 Interfacing communications 4-1
4.1.1 P2 - 10-pin wire crimp connector 4-2
4.1.2 P1 - 12-pin wire crimp connector 4-2
4.3 Interfacing DC power 4-3
4.3.1 Recommended power supply characteristics 4-3
4.2.2 Recommended wire gauge 4-3
4.3.3 P1 — 12’ (30.5 cm) ying leads interface 4-3
4.3.4 P1 — 7-pin pluggable terminal interface 4-4
4.3.5 P1 — 12-pin locking wire crimp interface 4-4
4.3.6 Drive Protection Module DPM-75
4.4 Interfacing Logic (universal input) 4-5
4.4.1 P1 — 12’ (30.5 cm) ying leads interface 4-5
4.4.2 P1 — 7-pin pluggable terminal interface 4-5
4.4.3 P1 — 12-pin locking wire crimp 4-6

Revision R031910

4.5 Interfacing Logic (differential inputs) 4-6
4.5.1 P1 — 12’ (30.5 cm) ying leads interface 4-6
4.5.2 P1 — 7-pin pluggable terminal interface 4-7
4.5.3 P1 — 12-pin locking wire crimp 4-7
4.6 Encoder interface 4-7
4.7 Connectivity accessory details 4-8
4.7.1 USB to SPI communications converter cables 4-8
4.7.2 Prototype development cables 4-9
4.7.3 Mating connector kits 4-9

List of Figures

Figure 1.1 Standard product options 1-2
Figure 2.2 Non-captive shaft mechanical speci cations 2-2
Figure 2.1 External shaft mechanical speci cations 2-2
Figure 2.3 12 VDC speed-force curves 2-4
Figure 2.4 24 VDC speed-force curves 2-5
Figure 2.5 48 VDC speed-force curves 2-5
Figure 3.1 Mdrive linear actuator mounting and drill pattern 3-2
Figure 3.2 Securing leads 3-5
Figure 3.3 Insert spring tang 3-7
Figure 3.4 Spring engaged 3-7
Figure 3.5 Insert opposite tang 3-7
Figure 3.6 Inserting the back nut 3-8
Figure 3.7 Measuring the gap distance 3-8
Figure 3.8 Pre-loading the nut 3-9
Figure 3.9 Nut pre-loaded and fully assembled 3-9
Figure 4.1 DPM75 Drive Protection Module 4-4
Figure 4.2 MD-CC302-001 communications converter cable 4-8
Figure 4.3 MD-CC303-001 communications converter cable 4-8
Figure 4.4 Prototype development cable PD12-1434-FL3 4-9
Figure 4.5 Encoder interface cable ED-CABLE-JST10 4-9

List of Tables

Table 2.1 Electrical speci cations 2-3
Table 3.2 I/O speci cations 2-3
Table 3.3 Communications speci cations 2-3
Table 3.4 Thermal speci cations 2-3
Table 3.5 Motion speci cations 2-4
Table 2.8 Linear actuator motor speci cations 2-4
Table 2.9 P2 communications, 10-pin locking wire crimp 2-6
Table 2.10 Power and logic interface - 12” (308.8.mm) ying leads 2-7
Table 2.11 Power and logic interface - 7-pin pluggable terminal 2-7
Table 2.10 Power and logic interface - 12” (308.8.mm) ying leads 2-8
Table 2.11 Power and logic interface - 7-pin pluggable terminal 2-8
Table 3.7 P1 Power, logic and communications 2-9
Table 3.7 P1 Power, logic and communications 2-10
Table 3.7 P1 Power, logic and communications 2-11
Table 4.1 Communications connections, P2 - 10-pin wire crimp 4-2
Table 4.2 Power and ground connections, 12-pin locking wire crimp 4-2
Table 4. 3 Recommended power supply characteristics 4-3
Table 4.4 Recommended power supply wire gauge 4-3
Table 4.5 Power and ground connections, ying leads 4-3
Table 4.6 Power and ground connections, 7-pin terminal 4-4
Table 4.7 Power and ground connections, 12-pin locking wire crimp 4-5
Table 4.8 Universal input connections, ying leads 4-5
Table 4.9 Universal input connections, 7-pin terminal 4-5
Table 4.10 Universal input connections, 12-pin locking wire crimp 4-6
Table 4.11 Differential input connections, ying leads interface 4-6
Table 4.12 Differential input connections, 7-pin terminal 4-7
Table 4.13 Differential input connections, 12-pin locking wire crimp 4-7
Table 4.14 P4 - Encoder interface 4-7

Revision R031910

Page intentionally left blank

1 Introduction

MDrive® linear actuators combine leading all-in-one integrated motion technology with linear motion to deliver high accuracy, unsurpassed repeatability and long life, all in a package that is extremely compact and affordable.

1.1 MDrive 17 linear actuator unit overview

1.1.1 Linear actuator styles

Two (2) linear actuator styles of MDrive 17 integrated motor + driver solutions are available:

- **Non-captive shaft** — a screw runs through the MDrive and moves axially as the motor rotates
- **External shaft** — a rotating screw, integral to the motor shaft, moves a screw-mounted nut axially

Precision rolled lead screws used with MDrive linear actuators are de-signed speci cally for motion
control applications to deliver maximum life and quiet operation. Corro-sion resistant and non-magnetic,
screws are manufactured from premium grade stainless steel and avail-able with optional coating.

1.1.2 MDrive 17 versions

Two (2) MDrive 17 integrated versions provide a choice of features and capabilities:

- **Microstepping** — motor + driver
- **Motion Control** — motor + driver + controller

MDrive 17 linear actuators feature high torque 1.8° brushless NEMA 17 (1.7”/43mm sq.) single length step motors with integrated electronics, providing the leading technology solution for all-in-one linear motion ap-plications.

Unsurpassed smoothness and performance delivered by MDrive 17 products are achieved through advanced 2nd generation current control. By applying innovative techniques to control current ow through the motor, resonance is signi cantly dampened over the entire speed range and audible noise is reduced.

The MDrive 17 accepts a broad input voltage range from +12 to +48 VDC, delivering enhanced performance and speed. Oversized input ca-pacitors are used to minimize power line surges, reducing problems that can occur with long cable runs and multiple drive systems. An extended operating range of –40° to +85°C provides long life, trouble free service in demanding environments.

Revision R031910

1.3 Product identi cation

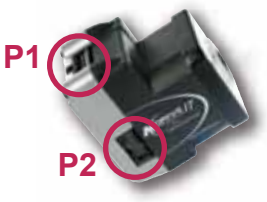

P1

I/O & power connectors:

F = flying leads
P = pluggable terminal
C = locking wire crimp (includes Comm on Microstepping version)

P2

Communication connectors:

D = 10-pin IDC
Z = None (when C used at P1 on Microstepping version)

Optional encoder

For NO encoder, omit any –E specification from part number

P1 P2

MLM [1,5] [F,P] **S** [D] **17A4** **– E □ M** **– L** [linear actuator]

MLM [1,5] [C] **S** [Z] **17A4** **– L** [linear actuator]

SPI comm

Input version
1 = Universal - standard
5 = Differential - CW/CCW

Internal magnetic differential encoder with index mark.

Line count / part#

100 / EAM	400 / EDM
200 / EBM	500 / EHM
250 / ECM	512 / EXM
256 / EWM	1000 / EJM
	1024 / EYM

See details at bottom of page for complete linear actuator part numbers.

1.3.1 Linear actuator options



Non-captive shaft

– L □ 1 □ □□□ Z □

Screw lead
travel per rev
A = 0.250" (6.35mm)
B = 0.125" (3.175mm)
C = 0.063" (1.588mm)
D = 0.031" (0.794mm)

Screw end
M = metric
U = UNC
S = smooth
Z = none

Screw length
3.0 to 18.0"
in 0.1 increments
ex. 12.5" = 125
10.0" = 100

Coating
T = teflon*
Z = none

Screw length calculation = mounting surface plate thickness + 1.40" (35.56mm) + desired stroke length

*Contact factory for availability.



External shaft

– L □ 3 □ □□□ □ □

Screw lead
travel per rev
A = 0.250"/6.35mm
B = 0.125"/3.175mm
C = 0.063"/1.588mm
D = 0.031"/0.794mm

Screw end
M = metric
U = UNC
S = smooth
Z = none

Screw length
3.0 to 18.0"
in 0.1 increments
ex. 12.5" = 125
10.0" = 100

Nut
G = general purpose (dynamic load limit to 25lbs/111N)
A = anti-backlash (dynamic load limit to 5lbs/22N)

Coating
T = teflon*
Z = none

Stroke length calculation = screw length – nut length – mounting surface plate thickness

Figure 1.1 Standard product options

1.4 Documentation reference

The following User's manuals are available for the MDrive 17 linear actuator:

- Product manual, describes the technical data, installation, con guration and programming of the product.
- Quick Reference, describes the basic wiring, connection and use of this product. The quick reference is shipped in printed form with the product.

This documentation is also available for download from the web site at http://www.imshome.com

1.5 Product software

The MDrive 17 linear actuator microstepping integrated motor and driver is con gured using the SPI motor interface graphical user interface. This free software may be downloaded from http://www.imshome.com/software_interfaces.html.

Installation and usages instructions are to be found in Part 1 of this document, Section 4.

This page has been intentionally left blank.

2 Speci cations

2.1 Mechanical speci cations

2.1.1 External shaft

Side view

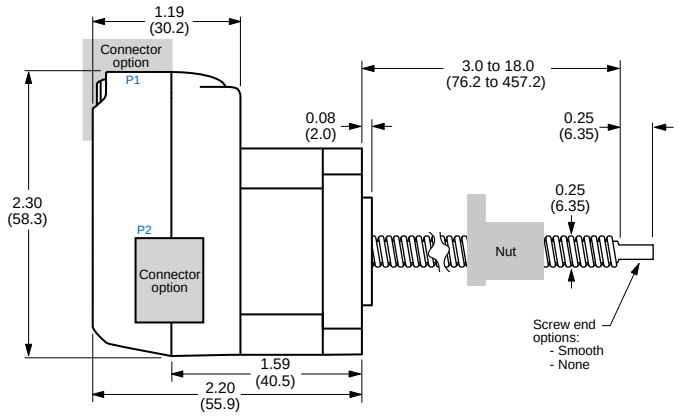

Front view

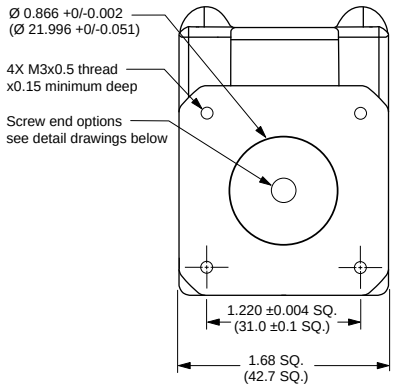

Nut detail

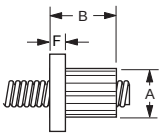

General purpose nut
Flange shape: round
Load limit: 25 lbs (11.3 kg)
Purpose: for applications not requiring anti-backlash and wear compensation.

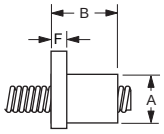

Anti-backlash nut
Flange shape: triangle
Load limit: 5 lbs (2.3 kg)
Purpose: backlash free operation for high accuracy and low drag torque.

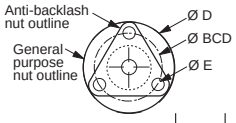

inches (mm)	A	B	D	E	F	BCD	*load limit*	*drag torque*
General purpose	0.50 (12.7)	0.75 (19.1)	1.0 (25.4)	0.14 (2.6)	0.15 (2.81)	0.75 (19.1)	25lbs/ 11.3kg	free wheeling
Anti-backlash	0.50 (12.7)	0.9max (22.86)	1.0 (25.4)	0.143 (2.63)	0.18 (4.57)	0.75 (19.1)	5lbs/ 2.3kg	< 1.0 oz-in < 0.7 N-cm

Screw Specifications

Screw material
MDrive Linear Actuator precision rolled lead screws are corrosion resistant and non-magnetic, manufactured from premium grade stainless steel.

Screw coating
An optional te on screw coating is available for smooth operation and extended life.

Standard screw
Dimensions in inches (mm)

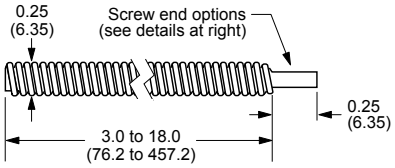

Lead options

inches (mm)	travel per revolution	travel per full step
Screw A	0.250 (6.350)	0.00125 (0.0317)
Screw B	0.125 (3.175)	0.00063 (0.0158)
Screw C	0.063 (1.588)	0.00031 (0.0079)
Screw D	0.031 (0.794)	0.00016 (0.0040)

Screw end options

Threaded end	Metric end: M4 x 0.7mm thread to within 0.03" (0.76mm) of shoulder	UNC end: #8-32 UNC-2A thread to within 0.03" (0.76mm) of shoulder
Smooth end	Ø 0.1967" ±0.001 (Ø 5mm ±0.003)	
None	—	

Revision R031910

Figure 2.1 External shaft mechanical speci cations - dimensions in inches (mm)

Cantilevered loads

Loads for external shaft MDrive® linear actuator products MUST BE supported. Side loading is not recommended.

Calculating screw/stroke length

Available stroke length = [6.0" screw] – [nut length] – [mounting surface plate thickness]

2.1.1 Non-captive shaft

Side view

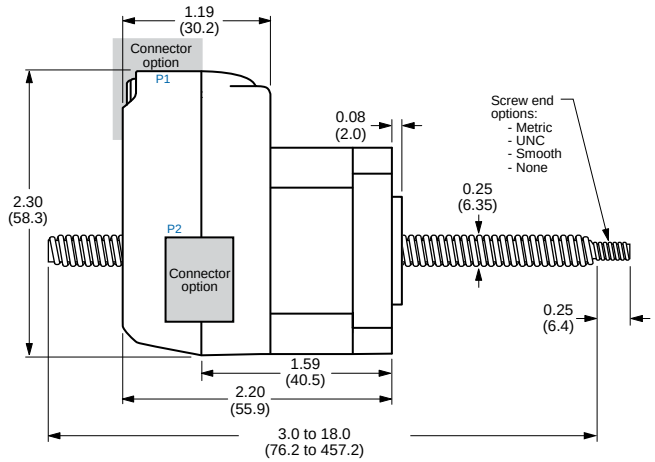

Front view

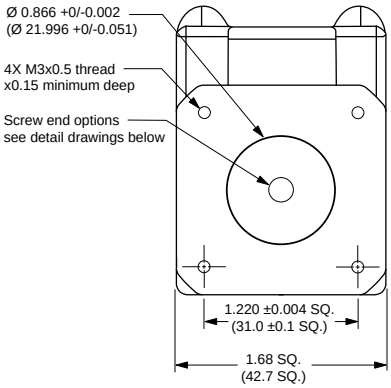

Screw Specifications

Standard Acme style rolled screw

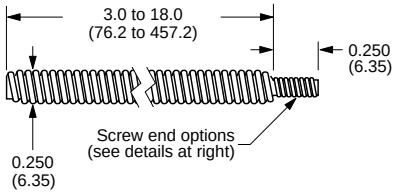

Lead options

inches (mm)	Travel/revolution	Travel/full step
Screw A	0.250 (6.35)	0.00125 (0.0317)
Screw B	0.125 (2.175)	0.00063 (0.0158)
Screw C	0.063 (1.588)	0.00031 (0.0079)
Screw D	0.031 (0.794)	0.00016 (0.004)

Screw end options

	Dimensions
Metric 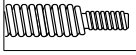	M4 x 0.7mm thread to within 0.03" (0.76mm) of shoulder
UNC 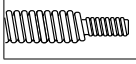	#8-32 UNC-2A thread to within 0.03" (0.76mm) of shoulder
Smooth 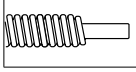	Ø 0.1967" ±0.001 (Ø 5mm ±0.003)
None 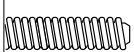	—

Figure 2.2 Non-captive shaft mechanical speci cations - dimensions in inches (mm)

Cantilevered loads

Unsupported loads and side loading are not recommended for non-captive shaft MDrive® linear actuator products.

Calculating screw/stroke length

Screw length = [mounting surface plate thickness] + [1.40" (35.56mm)] + [desired stroke length]]

2.2 General speci cations

2.2.1 Electrical speci cations

	Condition	Min	Typ	Max	Unit
Input voltage range	—	+12	—	+48	VDC
Max power supply current	—	—	—	2.0*	A

**per MDrive 17, Actual current depends on voltage and load.*

Table 2.1 Electrical speci cations

3.2.2 Logic speci cations

	Condition	Min	Typ	Max	Unit
Universal Inputs					
Isolated input voltage range (sourcing or sinking)	Isolated inputs	+5	—	+24	VDC
Current	+5 VDC max	—	—	8.7	mA
Current	+24 VDC max	—	—	14.6	mA
Differential Inputs					
Voltage range	—	0	—	+5	VDC
High level input voltage	—	+3.75	—	+5.75	VDC
Low level input voltage	—	—	—	≤+1.2	VDC

Table 3.2 I/O speci cations

3.2.3 Communications speci cations

Protocol	SPI

Table 3.3 Communications speci cations

3.2.4 Thermal speci cations

		Min	Typ	Max	Unit
Heat sink temperature	non-condensing humidity	-40	—	+85	ºC
Motor temperature	non-condensing humidity	-40	—	+100	ºC

Table 3.4 Thermal speci cations

3.2.5 Motion speci cations

Number of microstep resolutions	20

Available microsteps per revolution

200	400	800	1000	1600	2000	3200	5000	6400	10000
12800	20000	25000	25600	40000	50000	51200	36000[1]	21600[2]	25400[3]

1=0.01 deg/µstep 2=1 arc minute/µstep *3=0.001 mm/µstep
** 1" per revolution lead screw*

Digital filter range	50 ns to 12.9 µs (10 MHz to 38.8 kHz)
Clock types	step/direction, up/down, quadrature
Step frequency (max)	5 MHz
Step frequency minimum pulse width	100 ns

Table 3.5 Motion speci cations

2.2.8 Actuator motor speci cations

Holding torque		29.16 oz-in (20.6 N-cm)
Rotor inertia		0.0005 oz-in-sec^2 (0.035 kg-cm^2)
Maximum thrust	General purpose	50 lbs (222 N)
	With anti-backlash nut	25 lbs (111 N)
Maximum repeatability	General purpose	0.005" (0.127 mm)
	With anti-backlash nut	0.0005" (0.0127 mm)
Maximum screw misalignment		± 1°
Weight without screw		9.6 oz (272.2 g)

Table 2.8 Linear actuator motor speci cations

2.2.9 Speed-force performance curves

12 VDC Curves

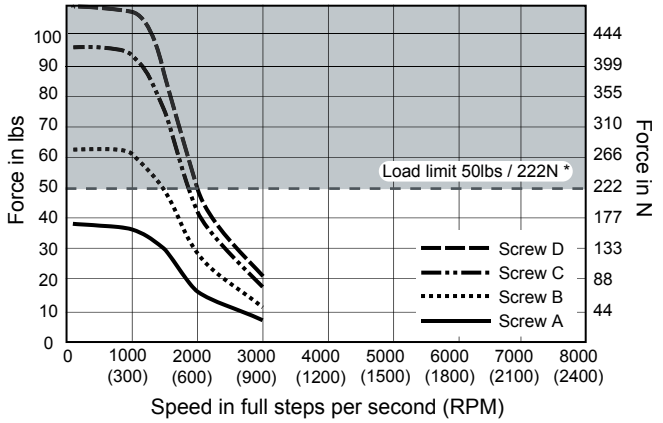

Figure 2.3 12 VDC speed-force curves

24 VDC Curves

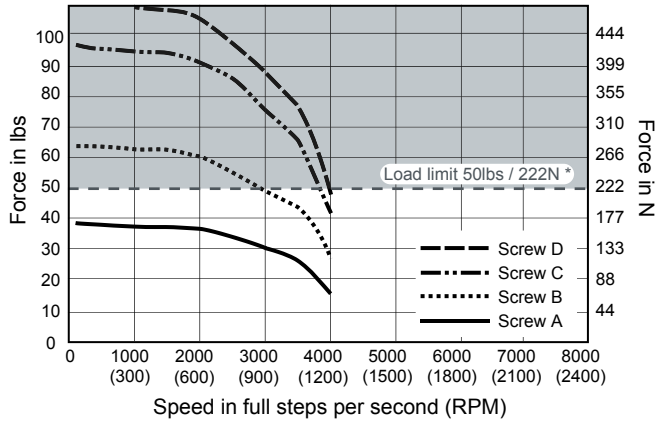

Figure 2.4 24 VDC speed-force curves

48VDC Curves

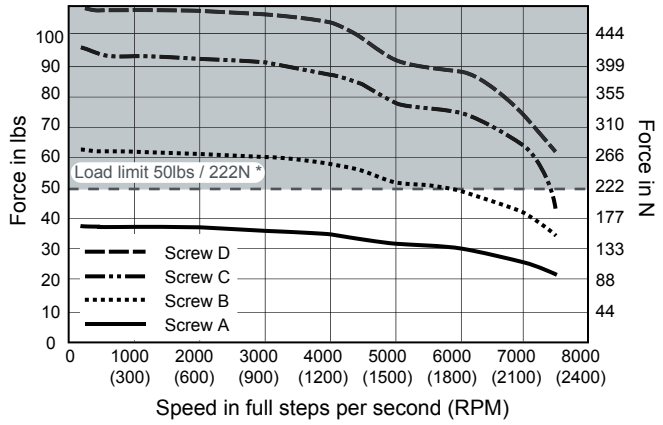

Figure 2.5 48 VDC speed-force curves

2.3 Connectivity speci cations/pin assignments - Communications

2.3.1 SPI communications - connector P2

⚠ CAUTION

+5VDC OUTPUT

The +5 VDC output on connector P2 is for the express purpose of powering the IMS isolated communications converter cables. Do not use to power external devices.

Failure to follow these instructions may result in damage to system components!

If using the model MDrive with the 12-pin locking wire crimp connector at connector position P1, the P2 connector is eliminated and SPI communications are bundled with power and logic.

10-pin friction lock wire crimp

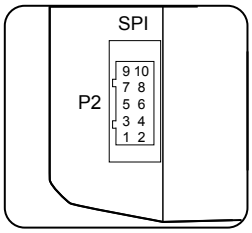

Connectivity Options
USB to SPI Converter:
MD-CC302-001

Mating connector kit:
CK-02

Mfg P/N:
Shell
Hirose DF11-10DS-2C

Pins
Hirose: DF11-2428SC

Pin #	Function	Description
1	N/C	Not connected
2	N/C	Not connected
3	N/C	Not connected
4	CS	SPI chip select, selected when low.
5	GND	Communications ground
6	+5V	+ 5 VDC output. Used to power the IMS communications converter ONLY! Not for general purpose use.
7	MOSI	SPI master out - slave in
8	CLK	SPI clock
9	N/C	Not connected
10	MISO	SPI master in - slave out

Table 2.9 P2 communications, 10-pin locking wire crimp

2.4 Connectivity speci cations/pin assignments - power and logic

2.4.1 Power and logic (universal inputs)

12” (304.8 mm) flying leads

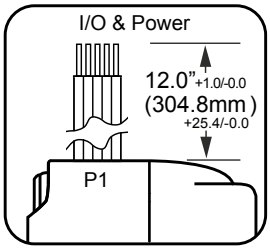

Wire Color	Function	Description
White	Opto	Optocoupler reference
Orange	Step clock	Step clock input
Blue	Direction	CW/CCW direction input
Brown	Enable	Output bridge enable input
Black	GND	Power ground
Red	+V	Motor Power (+12 to +48 VDC)

Table 2.10 Power and logic interface - 12” (308.8.mm) ying leads

7-pin pluggable terminal

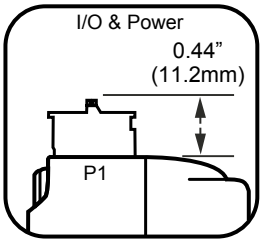

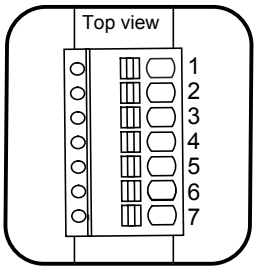

Pin #	Function	Description
1	Opto	Optocoupler reference
2	N/C	Not connected
3	Step clock	Step clock input
4	Direction	CW/CCW direction input
5	Enable	Output bridge enable input
6	GND	Power ground
7	+V	Motor Power (+12 to +48 VDC)

Table 2.11 Power and logic interface - 7-pin pluggable terminal

2.4.2 Power and logic (differential inputs)

⚠ CAUTION

ELECTRICAL OVERSTRESS

The universal logic inputs are tolerant to +24 VDC. The differential input version inputs are TTL level and only tolerant to +5 VDC:

Do not exceed +5 VDC on the differential inputs.

Failure to follow these instructions can result in equipment damage.

12" (304.8 mm) flying leads

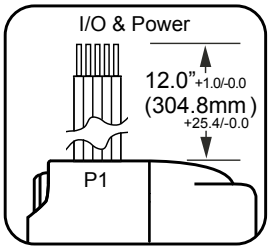

Wire Color	Function	Description
White	CW +	Clockwise plus input
Orange	CW -	Clockwise minus input
Blue	CCW -	Counter-clockwise minus input
Brown	CCW +	Counter-clockwise plus input
Black	GND	Power ground
Red	+V	Motor Power (+12 to +48 VDC)

Table 2.10 Power and logic interface - 12" (308.8.mm) ying leads

7-pin pluggable terminal

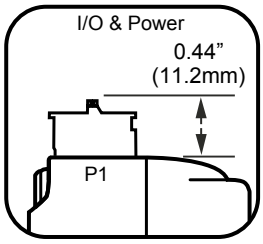

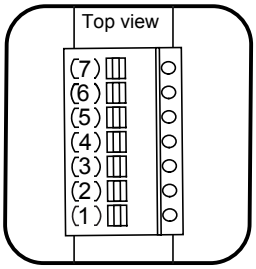

Pin #	Function	Description
1	CW +	Clockwise plus input
2	N/C	Not connected
3	CW -	Clockwise minus input
4	CCW -	Counter-clockwise minus input
5	CCW +	Counter-clockwise plus input
6	GND	Power ground
7	+V	Motor Power (+12 to +48 VDC)

Table 2.11 Power and logic interface - 7-pin pluggable terminal

Revision R031910

2.4.3 Power, logic and communications (universal input)

⚠ CAUTION

CONNECTOR PRODUCT ALERT!

The manufacturer of the Tyco 12-pin connector has begun marking the connector shell, PN 1-794617-2. with pin numbers as shown in the diagram on the right.

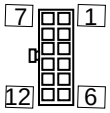

Disregard these markinings

Disregard these pin number markings. Use the pin numbering scheme as shown below.

Failure to follow these instructions can result in equipment damage.

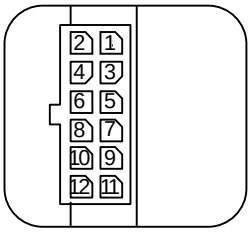

IMS Pin Numbering Scheme

Connectivity Options
USB to SPI Converter:
MD-CC303-001

Prototype development cable:
PD12-1434-FL3

Mating connector kit:
CK-03

Mfg P/N:
Shell
Tyco: 1-794617-2

Pins
Tyco: 794610-1

Pin #	Function	Description
1	GND	Motor power supply return (ground)
2	+V	+12 to +48 VDC motor power supply input
3	OPTO	Optocoupler power supply input
4	SCLK	Step Clock input
5	EN	The Enable Input can be used to enable or disable the driver output circuitry.
6	DIR	The direction Input controls the clockwise/ counterclockwise direction of the motor. It may be configured as sinking or sourcing depending on the state of the Optocoupler Reference.
7	+5 VDC	+5 VDC output. This output is only to be used to power the optional communications converter cable MD-CC305-001. Do not use to power external devices.
8	CLK	SPI Clock
9	CGND	Communications ground
10	MOSI	SPI Master In - Slave Out
11	CS	SPI Chip Select input
12	MISO	SPI Master In - Slave Out

Table 3.7 P1 Power, logic and communications

2.4.4 Power, logic and communications (differential input)

⚠ CAUTION

ELECTRICAL OVERSTRESS

The universal logic inputs are tolerant to +24 VDC. The differential input version inputs are TTL level and only tolerent to +5 VDC:

Do not exceed +5 VDC on the differential inputs.

Failure to follow these instructions can result in equipment damage.

⚠ CAUTION

CONNECTOR PRODUCT ALERT!

The manufacturer of the Tyco 12-pin connector has begun marking the connector shell, PN 1-794617-2. with pin numbers as shown in the diagram on the right.

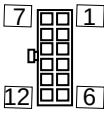

Disregard these markinings

Disregard these pin number markings. Use the pin numbering scheme as shown below.

Failure to follow these instructions can result in equipment damage.

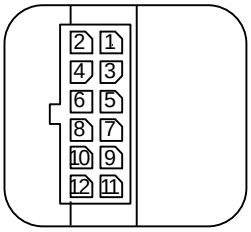

IMS Pin Numbering Scheme

Connectivity Options
USB to SPI Converter:
MD-CC303-001

Prototype development cable:
PD12-1434-FL3

Mating connector kit:
CK-03

Mfg P/N:
Shell
Tyco: 1-794617-2

Pins
Tyco: 794610-1

Pin #	Function	Description
1	GND	Motor power supply return (ground)
2	+V	+12 to +48 VDC motor power supply input
3	OPTO	Optocoupler power supply input
4	SCLK	Step Clock input
5	EN	The Enable Input can be used to enable or disable the driver output circuitry.
6	DIR	The direction Input controls the clockwise/ counterclockwise direction of the motor. It may be configured as sinking or sourcing depending on the state of the Optocoupler Reference.
7	+5 VDC	+5 VDC output. This output is only to be used to power the optional communications converter cable MD-CC305-001. Do not use to power external devices.
8	CLK	SPI Clock
9	CGND	Communications ground
10	MOSI	SPI Master In - Slave Out
11	CS	SPI Chip Select input
12	MISO	SPI Master In - Slave Out

Table 3.7 P1 Power, logic and communications

2.5 Connectivity speci cations/pin assignments - internal encoder

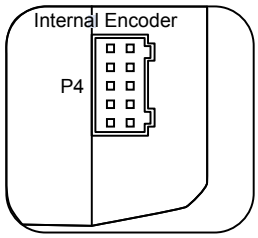

Pin #	Function	Description
1	GND	Encoder ground
2	CH A+	Channel A positive input
3	CH A-	Channel A negative input
4	CH B+	Channel B positive input
5	CH B-	Channel B negative input
6	IDX+	Index mark positive input
7	IDX-	Index mark negative input
8	N/C	Not connected
9	N/C	Not connected
10	N/C	Not connected

Table 3.7 P1 Power, logic and communications

2.5 Options

Drive Protection Module

The function of the DPM75 Drive Protection Module is to limit the surge current and voltage to a safe level when DC input power is switched on and off to a motor drive.

Internal encoder

Internal differential magnetic encoders with index mark are available with the MDrive Microstepping.

Line counts available: 100, 200, 250, 256, 400, 500, 512, 800, 1000

2.6 Connectivity

QuickStart kit

For rapid design veri cation, all-inclusive QuickStart Kits have communication converter, prototype development cable(s), instructions and CD for MDrive linear actuator initial functional setup and system testing.

Communication Converters

Electrically isolated, in-line converters pre-wired with mating connectors to conveniently set/program communication parameters for a single MDrive product via a PC's USB port. Length 12.0' (3.6m).

Mates to connector:

P2 10-pin wire crimp.....MD-CC302-001

P1 12 pin locking wire crimp.....MD-CC303-001

Prototype Development Cables

Speed test/development with pre-wired mating connectors that have y-ing leads other end. Length 10.0' (3.0m).

Mates to connector:

P1 12-pin locking wire crimp..... PD12-1434-FL3

P4 10-pin wire crimp (encoder) ED-CABLE-JST10

Mating Connector Kits

Use to build your own cables. Kit contains 5 mating shells with pins. Cable not supplied. Manufacturer's crimp tool recommended.

Mates to connector:

P2 10-pin wire crimp.....CK-02

P1 12-pin wire crimp.....CK-03

P4 10-pin wire crimp.....CK-13

3 Mounting and connection recommendations

⚠ CAUTION

LEAD RESTRAINT

Some linear actuator mounting con gurations require that the MDrive move along the screw. Ensure that all cabling is properly restrained to provide strain relief on connection points..

Failure to follow these instructions can result in equipment damage.

⚠ CAUTION

SCREW MISALIGNMENT

Ensure that support for the screw is in place as to not exceed the maximum misalignment of ±1°.

Failure to follow these instructions can result in equipment damage.

⚠ CAUTION

CANTILEVER LOADS

Loads for external shaft MDrive linear actuator products MUST BE supported. Side loading is not recommended.

Failure to follow these instructions can result in equipment damage.

⚠ CAUTION

MOUNTING SCREW TORQUE

When mounting the MDrive, do not exceed the maximum recommended tightening torque of 7.8 lb-in (9 kg-cm).

Failure to follow these instructions can result in equipment damage.

Revision R031910

3.1 Mounting

Care must be observed when installing the mounting screws on ALL MDrive 17 linear actuator versions. The mounting holes on the flange are not drilled through and have a maximum depth of 0.150” (3.81 mm).

The warning note and Figure below illustrate the maximum safe thread length and maximum torque for mounting all versions of the MDrive 17 linear actuator.

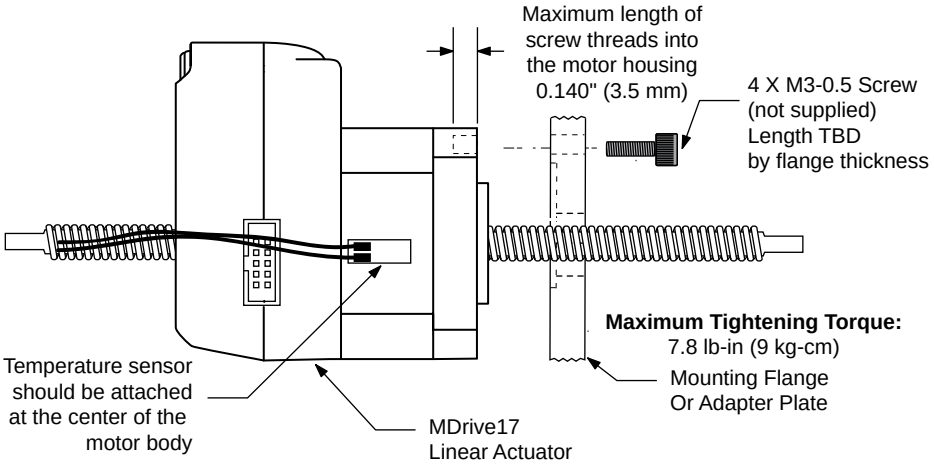

Drill Pattern for Mounting Flange or Adapter Plate

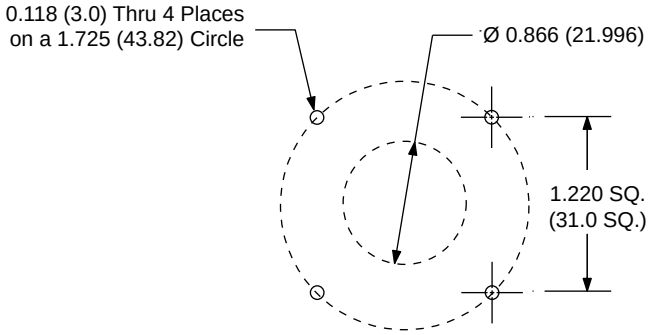

Figure 3.1 Mdrive linear actuator mounting and drill pattern

3.2 Layout and interface guidelines

Logic level cables must not run parallel to power cables. Power cables will introduce noise into the logic level cables and make your system unreliable.

Logic level cables must be shielded to reduce the chance of EMI induced noise. The shield needs to be grounded at the signal source to earth. The other end of the shield must not be tied to anything, but allowed to oat. This allows the shield to act as a drain.

Power supply leads to the MDrive 17 need to be twisted. If more than one driver is to be connected to the same power supply, run separate power and ground leads from the supply to each driver.

3.2.1 Rules of wiring

- Power Supply and Motor wiring should be shielded twisted pairs, and run separately from signal-carrying wires.
- A minimum of one twist per inch is recommended.
- Motor wiring should be shielded twisted pairs using 20 gauge, or for distances of more than 5 feet, 18 gauge or better.
- Power ground return should be as short as possible to established ground.
- Power supply wiring should be shielded twisted pairs of 18 gauge for less than 4 amps DC and 16 gauge for more than 4 amps DC.

3.2.2 Rules of shielding

- The shield must be tied to zero-signal reference potential. It is necessary that the signal be earthed or grounded, for the shield to become earthed or grounded. Earthing or grounding the shield is not effective if the signal is not earthed or grounded.
- •Do not assume that Earth ground is a true Earth ground. Depending on the distance from the main power cabinet, it may be necessary to sink a ground rod at the critical location.
- The shield must be connected so that shield currents drain to signal-earth connections.
- The number of separate shields required in a system is equal to the number of independent signals being processed plus one for each power entrance.
- The shield should be tied to a single point to prevent ground loops.
- A second shield can be used over the primary shield; however, the second shield is tied to ground at both ends.

Revision R031910

3.3 Recommended wiring

The following wiring/cabling is recommended for use with the MDrive 17:

Logic Wiring.....22 AWG

Wire Strip Length.....0.25” (6.0 mm)

Power and Ground .....20 AWG

3.3.1 Recommended mating connectors and pins

Communications

10-pin wire crimp (P2).....Hirose DF11-10DS-2C

Crimp contact for 10-pin wire crimp (22 AWG) DF11-22SC

Crimp contact for 10-pin wire crimp (24 - 28 AWG)..... DF11-2428SC

Crimp Contact for 10-pin wire crimp (30 AWG)..... DF11-30SC

Logic and Power

The following mating connectors are recommended for the MDrive

12-pin Locking Wire Crimp Connector Shell.....Tyco 1-794617-2

Crimp Pins.....Tyco 794610-1

3.4 Securing power leads and logic leads

Some applications may require that the MDrive move with the axis motion. If this is a requirement of your application, the motor leads (ying, pluggable or threaded) must be properly anchored. This will prevent exing and tugging which can cause damage at critical connection points within the MDrive.

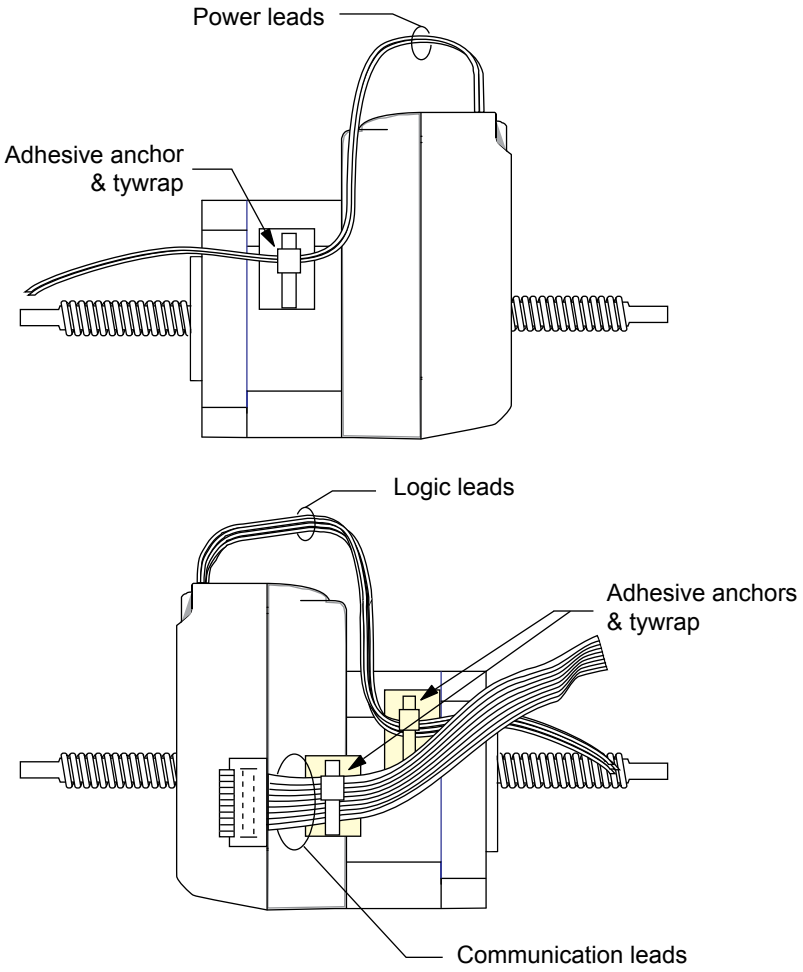

Figure 3.2 Securing leads

3.5 Anti-Backlash nut assembly and installation

3.5.1 Notes and warnings

- Do not use a wrench on the stainless steel cam of the nut.
- Do not oil the mechanism of the nut.
- Do not install the nut into an interference fit bore (mechanism will not work).

3.5.2 Installation

To install threaded model nuts, simply hand tighten until shoulder is flush with mounting surface. A small amount of Loctite thread compound such as #277 can be used to prevent loosening. Alternatively, a pin can be installed to mechanically lock the threads.

Flanged models can be mounted to either the front or rear face of the flange.

Before use, it is recommended that the stainless steel preload mechanism be turned so that the caming surfaces move down the ramps. Once play is felt, allow the mechanism to slowly unwind again to establish the proper preload. (It is possible in assembly to inadvertently twist the cam creating excessive drag torque. This procedure will correct this.)

Using lubricant on the lead screw threads is recommended. This extends the life of the nut and reduces heat generation, noise and vibration. TriGEL-300S or TriGEL-1200SC is recommended.

3.5.3 Removal from screw

If it is necessary to remove the nut from your screw, you may lock the mechanism so that it can be immediately reinstalled without re-setting the preload. This can be done by wrapping tape around the junction between the stainless steel cam and the plastic nut halves. This will prevent the cam from turning when the nut is removed from screw. Remember to remove tape after installation.

For immediate transfer from one screw to another, hold the nut together between your thumb and forefinger so that it cannot expand axially. Remove the nut and install it on the second screw. It may be helpful to prevent the cam from turning with your remaining fingers as you transfer. If the nut becomes disassembled or looses its preload for any reason, follow the steps listed in the assembly procedure below.

3.5.4 Assembly procedure

1) Insert spring tang into cam slot.

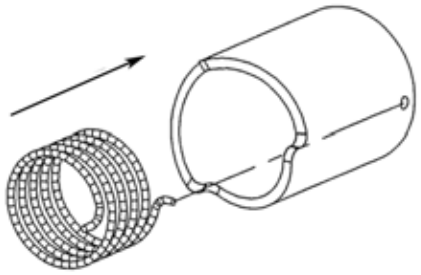

Figure 3.3 Insert spring tang

2) Ensure that the spring is engaged.

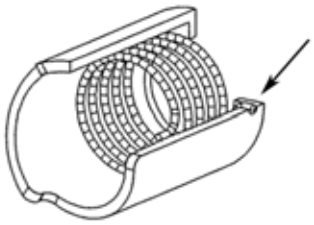

Figure 3.4 Spring engaged

3) Insert opposite tang into front nut slot or hole (dependant on size). Use the slot or hole that will allow the the cam to be positioned closest to the bottom of the ramp.

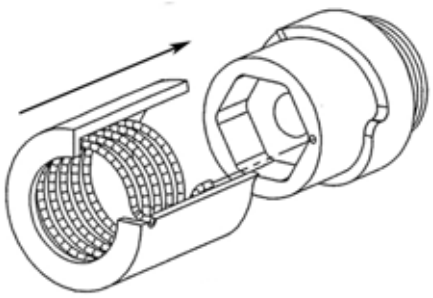

Figure 3.5 Insert opposite tang

1) With washer installed, insert the back nut into the front nut.

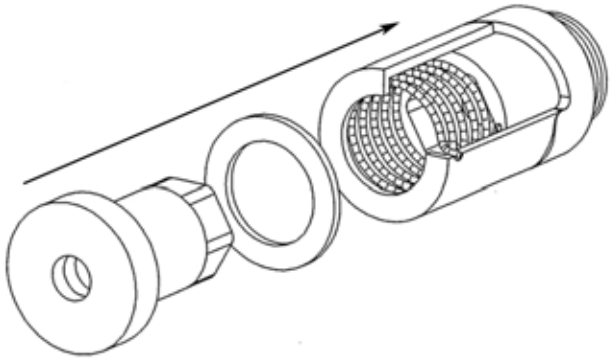

Figure 3.6 Inserting the back nut

2) With the cam held at the bottom of the ramp, thread the entire nut onto the screw starting with the front nut. After the entire nut is threaded onto the screw, release the cam to observe the gap distance (X on the drawing). The gap distance (X) should be about one-third of the full ramp distance, but no more than half.

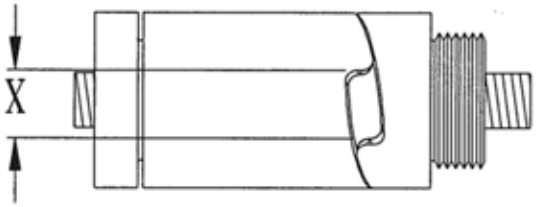

Figure 3.7 Measuring the gap distance

3) If the gap distance is incorrect, unthread the nut just enough to allow the back nut to disengage from the screw. Pull the back nut off and rotate to the next index position and reinsert back into the front nut. With the cam held at the bottom of the ramp, thread the entire nut back onto the screw. Release the cam and verify the correct gap distance. If still not correct repeat this step.

1) Once the back nut has been properly clocked to yield the correct gap distance, unthread the nut again just enough to disengage the back nut from the screw, but do not remove from the nut. Pull the cam away from the ramp and rotate in the clockwise direction for two ramp settings, then hold the cam at the bottom of the second ramp. Be careful not to allow the back nut to rotate with respect to the front nut while completing this task. With the cam held at the bottom of the second ramp, push the back nut into the front nut and thread the entire nut onto the screw.

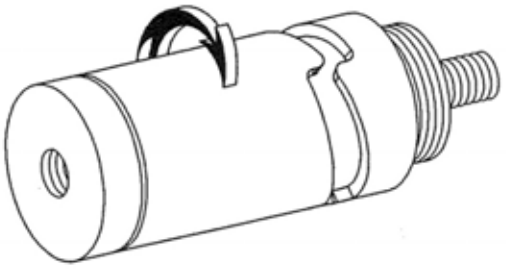

Figure 3.8 Pre-loading the nut

2) The anti-backlash nut is now pre-loaded and fully assembled.

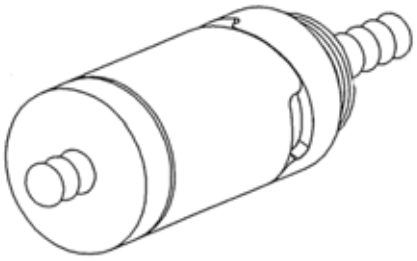

Figure 3.9 Nut pre-loaded and fully assembled

This page intentionally left blank

4 Connection and interface

⚠ DANGER

EXPOSED SIGNALS

Hazardous voltage levels may be present if using an open frame power supply to power the product.

Failure to follow these instructions will result in death or serious injury.

⚠ CAUTION

SWITCHING DC POWER/HOT PLUGGING

Do not connect or disconnect power, logic, or communications while the device is in a powered state.

Remove DC power by powering down at the AC side of the DC power supply.

Failure to follow these instructions can result in equipment damage.

⚠ CAUTION

CONNECTOR PRODUCT ALERT!

The manufacturer of the Tyco 12-pin connector has begun marking the connector shell, PN 1-794617-2. with pin numbers as shown in the diagram on the right.

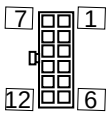

Disregard these markinings

Disregard these pin number markings. Use the pin numbering scheme as shown in this document.

Failure to follow these instructions can result in equipment damage.

4.1 Interfacing communications

SPI communications may be interfaced using one of two possible connector options:

1. 10-pin wire crimp connector at P2
2. 12-pin locking wire crimp connector at P1

If using the 12-pin locking wire crimp connector at P1, there will be no P2 connector. The P1 option will bundle power, logic and communications on a single connector.



For general SPI communications methods and practices please see Part 1, Section 4 of this document.

If using the model MDrive with the 12-pin locking wire crimp connector at connector position P1, the P2 connector is eliminated and SPI communications are bundled with power and logic.

Revision R031910

4.1.1 P2 - 10-pin wire crimp connector

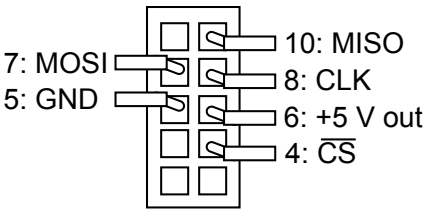

Pin #	Function	Description
1	N/C	Not connected
2	N/C	Not connected
3	N/C	Not connected
4	CS	SPI chip select, selected when low.
5	GND	Communications ground
6	+5V	+ 5 VDC output. Used to power the IMS communications converter ONLY! Not for general purpose use.
7	MOSI	SPI master out - slave in
8	CLK	SPI clock
9	N/C	Not connected
10	MISO	SPI master in - slave out

Table 4.1 Communications connections, P2 - 10-pin wire crimp

Connectivity accessories

Mating connector kit CK-02
(contains 5 connector shells and the appropriate quantity of pins to make 5 cables)

Communications converter cable (10'/3.0 m).....MD-CC302-001

Manufacturer (Hirose) part numbers

Connector shell..... DF11-10DS-2C

Pins..... DF11-2428SC

4.1.2 P1 - 12-pin wire crimp connector

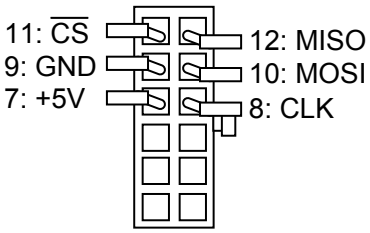

Pin #	*Signal*	*IMS cable wire colors*	
		MD-CC303-001	PD14-1434-FL3
7	+ 5 VDC output	—	White/brown
8	SPI clock	—	White/green
9	Comm ground	—	Green/white
10	SPI MOSI	—	White/gray
11	SPI chip select	—	Gray/white
12	SPI MISO	—	Brown/white

Table 4.2 Power and ground connections, 12-pin locking wire crimp

Connectivity accessories

Mating connector kit CK-03
(contains 5 connector shells and the appropriate quantity of pins to make 5 cables)

Prototype development cable (10'/3.0 m)..... PD12-1434-FL3

Manufacturer (Tyco) part numbers

Connector shell.....1-794617-2

Pins.....794610-1

4.3 Interfacing DC power

See part 1 of this document, section 3, for recommended power cable con gurations.

> **⚠ CAUTION**
>
> OVER VOLTAGE
>
> The DC voltage range for the MDrive 17 linear actuator is +12 to +48 VDC. Ensure that motor back EMF is factored into your power supply size calculations.
>
> Allow 2.0 A maximum power supply output current per MDrive 17 in the system. Actual power supply current will depend on voltage and load.
>
> **Failure to follow these instructions can result in equipment damage.**

4.3.1 Recommended power supply characteristics

Voltage range	+12 to +48 VDC
Type	Unregulated linear
Ripple	± 5%
Output current	1.0 A (per MDrive 1

Table 4. 3 Recommended power supply characteristics

4.2.2 Recommended wire gauge

1 Ampere (Peak)					
Length (Feet)	10	25	50*	75*	100*
Minimum AWG	20	20	18	18	16
2 Amperes (Peak)					
Length (Feet)	10	25	50*	75*	100*
Minimum AWG	20	18	16	14	14

Table 4.4 Recommended power supply wire gauge

4.3.3 P1 — 12’ (30.5 cm) ying leads interface

Wire Color	
Red	+12 to + 48 VDC
Black	Power ground

Table 4.5 Power and ground connections, ying leads

4.3.4 P1 — 7-pin pluggable terminal interface

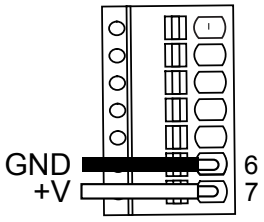

Pin #	
6	Power ground
7	+12 to + 48 VDC

Table 4.6 Power and ground connections, 7-pin terminal

4.3.5 P1 — 12-pin locking wire crimp interface

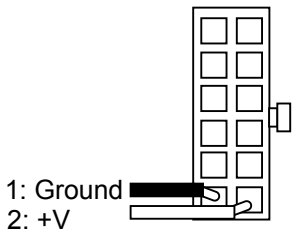

Pin #	*Signal*	*IMS cable wire colors*	
		MD-CC303-001	PD14-1434-FL3
2	+12 to + 48 VDC	Red	Red
1	Power ground	Black	Black

Table 4.7 Power and ground connections, 12-pin locking wire crimp

Connectivity accessories

Mating connector kit CK-03
(contains 5 connector shells and the appropriate quantity of pins to make 5 cables)

Prototype development cable (10'/3.0 m)..... PD12-1434-FL3

Manufacturer (Tyco) part numbers

Connector shell.....1-794617-2

Pins.....794610-1

Revision R031910

4.3.6 Power Interface using Drive Protection Module DPM75

The DPM75 Drive Protection Module will limit surge currents for up to three (3) MDrive 14 units at up to 48 VDC to allow switching DC Power.

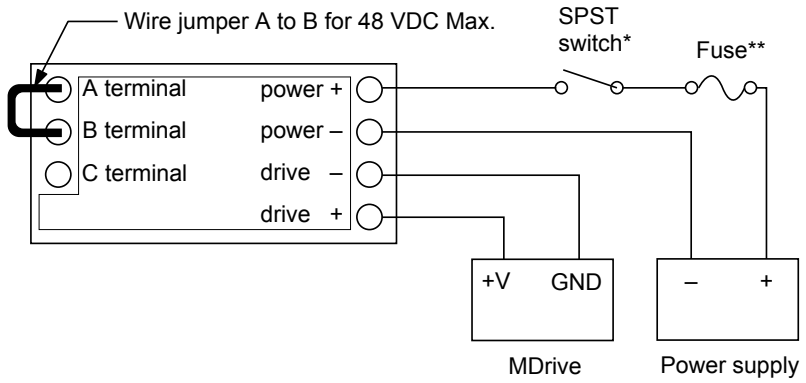

* Do not switch negative side of supply
**Fuse = 6.3 Amp slow blow (recommended: Bussman S505-6.3A or Littelfuse 215006.3). The fuse is optional.

Figure 4.1 DPM75 Drive Protection Module

4.4 Interfacing Logic (universal input)

See part 1 of this document, section 4, for logic interface con urations and methods.

4.4.1 P1 — 12’ (30.5 cm) ying leads interface

Wire Color	*Signal*
White	Opto reference
Orange	CW/CCW direction input
Blue	Step clock input
Brown	Enable input

Table 4.8 Universal input connections, ying leads

4.4.2 P1 — 7-pin pluggable terminal interface

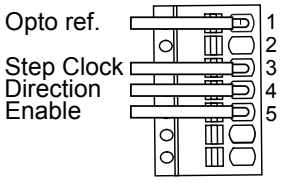

Pin #	*Signal*
1	Opto reference
3	CW/CCW direction input
4	Step clock input
5	Enable input

Table 4.9 Universal input connections, 7-pin terminal

4.4.3 P1 — 12-pin locking wire crimp

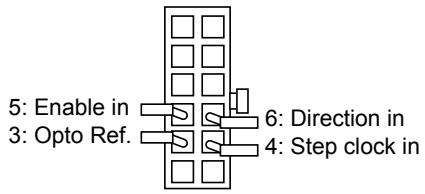

Pin #	*Signal*	*IMS cable wire colors*	
		MD-CC303-001	PD12-1434-FL3
3	Opto reference	White	White/blue
4	Step clock input	Green	Blue/white
5	Enable input	Orange	White/orange
6	Direction input	Blue	Orange/white

Table 4.10 Universal input connections, 12-pin locking wire crimp

Connectivity accessories

Mating connector kit CK-03
(contains 5 connector shells and the appropriate quantity of pins to make 5 cables)

Prototype development cable (10'/3.0 m)..... PD12-1434-FL3

Manufacturer (Tyco) part numbers

Connector shell.....1-794617-2

Pins.....794610-1

4.5 Interfacing Logic (differential inputs)

⚠ CAUTION

ELECTRICAL OVERSTRESS

The universal logic inputs are tolerant to +24 VDC. The differential input version inputs are TTL level and only tolerant to +5 VDC:

Do not exceed +5 VDC on the differential inputs.

Failure to follow these instructions can result in equipment damage.

4.5.1 P1 — 12' (30.5 cm) ying leads interface

Wire Color	*Signal*
White	CW +
Orange	CW —
Blue	CCW —
Brown	CCW +

Table 4.11 Differential input connections, ying leads interface

4.5.2 P1 — 7-pin pluggable terminal interface

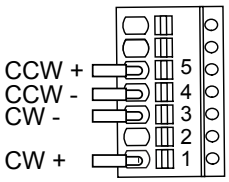

Pin #	*Signal*
1	CW +
3	CW —
4	CCW —
5	CCW +

Table 4.12 Differential input connections, 7-pin terminal

4.5.3 P1 — 12-pin locking wire crimp

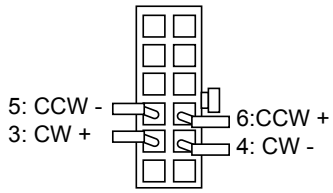

Pin #	*Signal*	*IMS cable wire colors*	
		MD-CC303-001	PD12-1434-FL3
3	CW +	White	White/blue
4	CW —	Green	Blue/white
5	CCW —	Orange	White/orange
6	CCW +	Blue	Orange/white

Table 4.13 Differential input connections, 12-pin locking wire crimp

Connectivity accessories

Mating connector kit CK-03
(contains 5 connector shells and the appropriate quantity of pins to make 5 cables)

Prototype development cable (10'/3.0 m)..... PD12-1434-FL3

Manufacturer (Tyco) part numbers

Connector shell.....1-794617-2

Pins.....794610-

4.6 Encoder interface

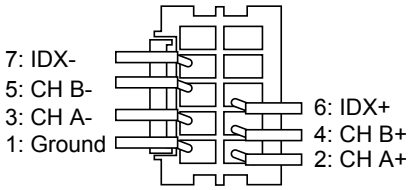

Pin #	*Signal*	*IMS cable wire color*
		ED-CABLE-JST10
1	GND	White/Brown
2	CH A+	White/green
3	CH A-	Green/white
4	CH B+	White/orange
5	CH B-	Orange/white
6	IDX+	White/blue
7	IDX-	Blue/white
8	No Connect	Brown/white

Table 4.14 P4 - Encoder interface

4.7 Connectivity accessory details

4.7.1 USB to SPI communications converter cables

USB to 10-pin wire crimp connector P2
P/N: MD-CC302-001

Electrically isolated in-line USB to SPI converter pre-wired with mating connector to conveniently program and set con guration parameters

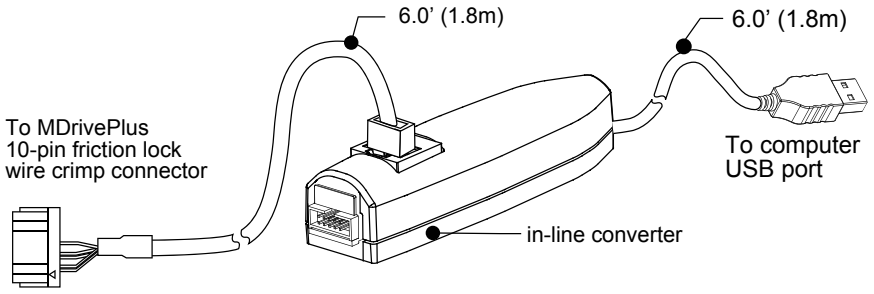

Figure 4.2 MD-CC302-001 communications converter cable

USB to 12-pin wire crimp connector P1
P/N: MD-CC303-001

Electrically isolated in-line USB to SPI converter pre-wired with mating connector to conveniently program and set con guration parameters. Power and logic signals are bundled into this connector via a second cable with signal accessibility via ying leads.

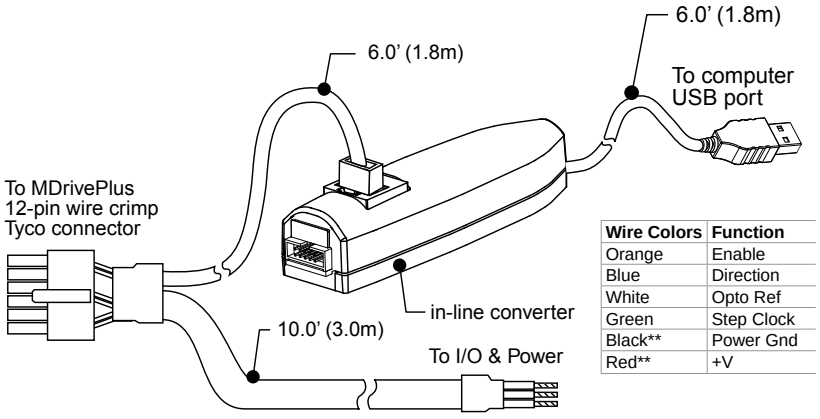

Wire Colors	Function
Orange	Enable
Blue	Direction
White	Opto Ref
Green	Step Clock
Black**	Power Gnd
Red**	+V

Figure 4.3 MD-CC303-001 communications converter cable

4.7.2 Prototype development cables

Flying leads to16-pin locking wire crimp connector P2 -P/N: PD12-1434-FL3

The PD12-1434-FL3 prototype development cable is used to rapidly interface the MDrive to the users power, communications and logic interface. This 10' (3.0 m) cable consists of a 12-pin locking wire crimp connector to plug directly into the MDrive P1 connector with ying leads on the opposite end to interface to power, communications and logic.

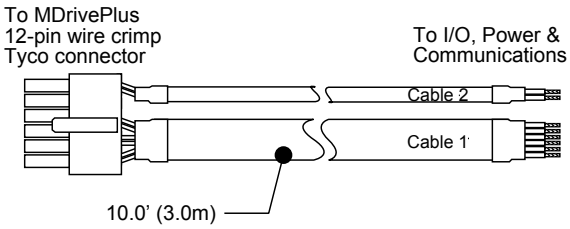

Wire Colors	Function
Gray/White	Chip Select
White/Gray	SPI MOSI
White/Brown	+5 VDC
Brown/White	SPI MISO
White/Green	SPI Clock
Green/White	Comm Gnd
White/Orange	Enable
Orange/White	Direction
White/Blue	Opto Ref
Blue/White	Step Clock
Black	Power Gnd
Red	+V
Uninsulated	Drain Wire

Figure 4.4 Prototype development cable PD12-1434-FL3

Flying leads to 10-pin locking wire crimp connector P4 -P/N: ED-CABLE-JST10

The ED-CABLE-JST10 prototype development cable is used to rapidly interface the MDrive optional encoder interface to the users controller. This 10' (3.0 m) cable consists of a 10-pin locking wire crimp connector to plug directly into the MDrive optional P4 connector with ying leads on the opposite end to interface a control device.

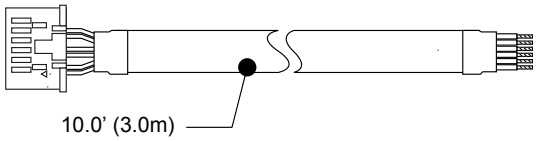

Pair	Wire Colors	Function
1	White/Blue	IDX+
	Blue/White	IDX-
2	White/Orange	CH B+
	Orange/White	CH B-
3	White/Green	CH A+
	Green/White	CH A-
4	White/Brown	Ground
	Brown/White	N/C

Figure 4.5 Encoder interface cable ED-CABLE-JST10

4.7.3 Mating connector kits

Use to build your own cables. Kit contains 5 mating shells with pins. Cable not supplied. Manufacturer's crimp tool recommended.

Mates to connector:

P2 10-pin wire crimp.....CK-02

P1 12-pin wire crimp.....CK-03

P4 10-pin wire crimp (encoder).....CK-13

This page intentionally left blank.

MDrive® 23 Linear Actuator

Microstepping

CE RoHS

1. Introduction
2. Speci cations
3. Mounting Recommendations
4. Interface and Connectivity

This page intentionally left blank

Table of Contents

1 Introduction 1-1
1.1 MDrive 23 linear actuator unit overview 1-1
1.1.1 Linear actuator styles 1-1
1.1.2 MDrive 23 linear versions 1-1
1.3 Product identi cation 1-2
1.4 Documentation reference 1-3
1.5 Product software 1-3

2 Speci cations 2-1
2.1 Mechanical speci cations .....
2-1
2.1.1 Non-Captive Shaft 2-1
2.1.2 External Shaft 2-2
2.1.2 External Shaft 2-2
2.2 General speci cations 2-3
2.2.1 Electrical speci cations 2-3
3.2.2 Logic speci cations 2-3
3.2.3 Communications speci cations 2-3
3.2.4 Thermal speci cations 2-3
3.2.5 Motion speci cations 2-4
2.2.8 Motor speci cations 2-4
2.2.9 Speed-force performance curves 2-5
2.3 Connectivity speci cations/pin assignments - Communications 2-6
2.3.1 SPI communications - connector P2 2-6
2.4 Connectivity speci cations/pin assignments - power and ... logic 2-7
2.4.1 Power and logic (universal inputs) 2-7
2.4.2 Power and logic (differential inputs) 2-8
2.4.3 Power, logic and communications — 12-pin wire crimp (universal input) 2-9
2.4.5 Power, logic and communications (differential input) 2-10
2.5 Connectivity speci cations/pin assignments - internal encoder 2-11
2.5 Options 2-12
2.6 Connectivity 2-12

3 Mounting and connection recommendations 3-1
3.1 Mounting .....
3.1 Mounting 3-2
3.2 Layout and interface guidelines 3-3
3.2.1 Rules of wiring 3-3
3.2.2 Rules of shielding 3-3
3.3 Recommended wiring 3-4
3.3.1 Recommended mating connectors and pins 3-4
3.4 Securing power leads and logic leads 3-5
3.5 Anti-Backlash nut assembly and installation 3-6
3.5.1 Notes and warnings 3-6
3.5.2 Installation 3-6
3.5.3 Removal from screw 3-6
3.5.4 Assembly procedure 3-7

Revision R031910

4 Connection and interface 4-1
4.1 Interfacing communications..... 4-1
4.1.1 P2 - 10-pin IDC style connector..... 4-2
4.1.2 P1 - 12-pin wire crimp connector..... 4-2
4.3 Interfacing DC power..... 4-3
4.2.1 Recommended power supply characteristics 4-4
4.2.2 Recommended wire gauge..... 4-4
4.3.3 P1 — 12’ (30.5 cm) ying leads interface..... 4-4
4.3.4 P1 — 7-pin pluggable terminal interface..... 4-4
4.3.5 P1 — 12-pin locking wire crimp interface 4-5
4.3.7 Power Interface using Drive Protection Module DPM75 4-5
4.4 Interfacing Logic (universal input) 4-6
4.4.1 P1 — 12’ (30.5 cm) ying leads interface..... 4-6
4.4.2 P1 — 7-pin pluggable terminal interface..... 4-6
4.4.3 P1 — 12-pin locking wire crimp 4-6
4.5 Interfacing Logic (differential inputs) 4-7
4.5.1 P1 — 12’ (30.5 cm) ying leads interface..... 4-7
4.5.2 P1 — 7-pin pluggable terminal interface..... 4-8
4.5.3 P1 — 12-pin locking wire crimp 4-8
4.6 Encoder interface 4-9
4.6.1 P4 — 10-pin wire crimp 4-9
4.7 USB to SPI communications converters 4-10
4.7.1 USB to 10-pin IDC — MD-CC300-001 4-10
4.7.2 USB to 12-pin wire crimp — MD-CC303-001 .. 4-10
4.8 Prototype development cables..... 4-11
4.8.1 P1 — 12-pin locking wire crimp PD12-1434-FL3.... 4-11
4.8.2 .....P4 — 10-pin wire crimp ED-CABLE-JST10..... 4-12
4.9 Mating connector kits 4-12

List of Figures

Figure 1.1 Standard product options 1-2
Figure 2.1 Non-captive shsft mechanical speci cations 2-1
Figure 2.2 External shaft mechanical speci cations 2-2
Figure 2.3 Motor performance curve — +24 VDC 2-5
Figure 2.4 Motor performance curve — +48 VDC 2-5
Figure 2.5 Motor performance curve — +75 VDCr 2-5
Figure 3.1 Mounting and drill pattern 3-2
Figure 3.2 Securing leads 3-5
Figure 3.3 Insert spring tang 3-7
Figure 3.4 Spring engaged 3-7
Figure 3.5 Insert opposite tang 3-7
Figure 3.6 Inserting the back nut 3-8
Figure 3.7 Measuring the gap distance 3-8
Figure 3.8 Pre-loading the nut 3-9
Figure 3.9 Nut pre-loaded and fully assembled 3-9
Figure 4.1 DPM75 Drive Protection Module 4-5
Figure 4.2 MD-CC300-001 communications converter cable 4-10
Figure 4.3 MD-CC303-001 communications converter cable 4-10
Figure 4.4 Prototype development cable PD12-1434-FL3 4-11
Figure 4.5 Encoder interface cable ED-CABLE-JST10 4-12

Revision R031910

List of Tables

Table 2.1 Electrical speci cations 2-3
Table 2.2 I/O speci cations 2-3
Table 2.3 Communications speci cations 2-3
Table 2.4 Thermal speci cations 2-3
Table 2.5 Motion speci cations 2-4
Table 2.8 MDrive 23 linear actuator speci cations 2-4
Table 2.7 P2 communications, 10-pin IDC 2-6
Table 2.8 Power and logic interface - 12” (308.8.mm) ying leads 2-7
Table 2.9 Power and logic interface - 7-pin pluggable terminal 2-7
Table 2.10 Power and logic interface - 12” (308.8.mm) ying leads 2-8
Table 2.11 Power and logic interface - 7-pin pluggable terminal 2-8
Table 2.12 P1 Power, logic and communications 2-9
Table 2.13 P1 Power, logic and communications 2-10
Table 2.14 P1 Power, logic and communications 2-11
Table 4.1 Communications connections, P2 - 10-pin IDC 4-2
Table 4.2 Communications connections, 12-pin locking wire crimp 4-2
Table 4.3 Recommended power supply characteristics 4-4
Table 4.4 Recommended power supply wire gauge 4-4
Table 4.5 Power and ground connections, ying leads 4-4
Table 4.6 Power and ground connections, 7-pin terminal 4-4
Table 4.7 Power and ground connections, 12-pin locking wire crimp ... 4-5
Table 4.8 Universal input connections, ying leads 4-6
Table 4.9 Universal input connections, 7-pin terminal 4-6
Table 4.10 Universal input connections, 12-pin locking wire crimp 4-6
Table 4.11 Differential input connections, ying leads interface 4-7
Table 4.12 Differential input connections, 7-pin terminal 4-8
Table 4.13 Differential input connections, 12-pin locking wire crimp 4-8
Table 4.14 P4 - Encoder interface 4-9

1 Introduction

MDrive® linear actuators combine leading all-in-one integrated motion technology with linear motion to deliver high accuracy, unsurpassed repeatability and long life, all in a package that is extremely compact and affordable.

1.1 MDrive 23 linear actuator unit overview

1.1.1 Linear actuator styles

Two (2) linear actuator styles of MDrive 23 integrated motor + driver solutions are available:

- **Non-captive shaft** — a screw runs through the MDrive and moves axially as the motor rotates
- **External shaft** — a rotating screw, integral to the motor shaft, moves a screw-mounted nut axially

Precision rolled lead screws used with MDrive linear actuators are designed speci cally for motion control applications to deliver maximum life and quiet operation. Corrosion resistant and non-magnetic, screws are manufactured from premium grade stainless steel and available with optional coating.

1.1.2 MDrive 23 linear versions

Three (2) MDrive 23 integrated versions provide a choice of features and capabilities:

- **Microstepping** — motor + driver
- **Motion Control** — motor + driver + controller

MDrive14 linear actuators feature high torque 1.8° brushless NEMA 23 single length step motors with integrated electronics, providing the leading technology solution for all-in-one linear motion applications.

Unsurpassed smoothness and performance delivered by MDrive 23 products are achieved through IMS's advanced 2nd generation current control. By applying innovative techniques to control current ow through the motor, resonance is signi cantly dampened over the entire speed range and audible noise is reduced.

The MDrive 23 accepts a broad input voltage range from +12 to +75 VDC, delivering enhanced performance and speed. Oversized input capacitors are used to minimize power line surges, reducing problems that can occur with long cable runs and multiple drive systems. An extended operating range of –40° to +85°C provides long life, trouble free service in demanding environments.mapping and extended node identi er.

Motor con gurations include a single shaft rotary in four lengths, and linear actuators with long life Acme screw**.

Revision R031910

1.3 Product identi cation



P1

I/O & power connectors:

F = flying leads
P = pluggable terminal
C = locking wire crimp
>includes Comm on Microstepping version
>includes separate P3 power connector on Motion Control versions

P2

Communication connectors:

D = 10-pin IDC
L = 10-pin friction lock wire crimp
B = DB9, only with CANopen Comm
Z = None (when C used at P1 on Microstepping version)

P1 P2

MLM [1,5] [F,P] **S** [D] **23A7**

MLM [1,5] [C] **S** [Z] **23A7**

SPI comm

Input version
1 = Universal - standard
5 = Differential - CW/CCW

Optional encoder
For NO encoder, omit any –E specification from part number

– E M

Internal magnetic differential encoder with index mark.

Line count / part#	
100 / EAM	400 / EDM
200 / EBM	500 / EHM
250 / ECM	512 / EXM
256 / EWM	800 / EFM
	1000 / EJM

– L [linear actuator]

– L [linear actuator]

See details at bottom of page for complete linear actuator part numbers.



Non-captive shaft

– L 1 Z

Screw lead
travel per rev
G = 0.375" (9.525mm)
A = 0.200" (5.08mm)
B = 0.167" (4.233mm)
D = 0.083" (2.116mm)

Screw end
M = metric
U = UNC
S = smooth
Z = none

Screw length
3.0 to 24.0"
in 0.1 increments
ex. 12.5" = 125
10.0" = 100

Coating
T = teflon*
Z = none

Screw length calculation = desired stroke length + 1.8" (45.7mm) + mounting surface plate thickness



External shaft

– L 3

Screw lead
travel per rev
G = 0.375" (9.525mm)
A = 0.200" (5.08mm)
B = 0.167" (4.233mm)
D = 0.083" (2.116mm)

Screw end
M = metric
U = UNC
S = smooth
Z = none

Screw length
3.0 to 24.0"
in 0.1 increments
ex. 12.5" = 125
10.0" = 100

Nut
G = general purpose (dynamic load limit to 60lbs/22kg)
A = anti-backlash (dynamic load limit to 25lbs/11kg)

Coating
T = teflon*
Z = none

Screw length calculation = desired stroke length + nut length + mounting surface plate thickness

Figure 1.1 Standard product options

1.4 Documentation reference

The following user's manuals are available for the MDrive 23 Linear Actuator:

- Product manual, describes the technical data, installation, con guration and programming of the product.
- Quick Reference, describes the basic wiring, connection and use of this product. The quick reference is shipped in printed form with the product.

This documentation is also available for download from the IMS web site at http://www.imshome.com

1.5 Product software

The MDrive 23 Linear Actuator Microstepping integrated motor and driver is con gured using the IMS SPI motor interface graphical user interface. This free software may be downloaded from http://www.imshome.com/software_interfaces.html.

Installation and usages instructions are to be found in Part 1 of this document, Section 5.

This page has been intentionally left blank.

2 Speci cations

2.1 Mechanical speci cations

2.1.1 Non-Captive Shaft

Side view

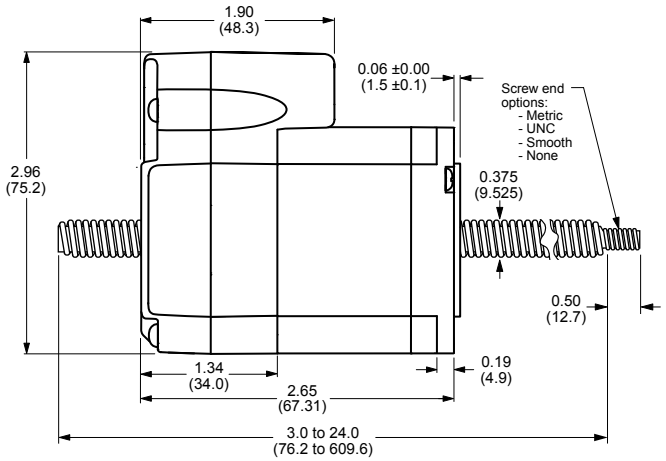

Front view

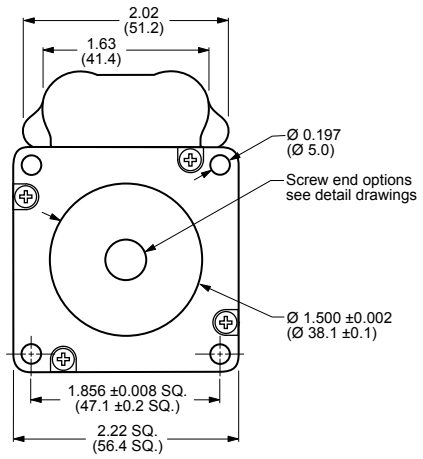

Load limit
Nominal load limit: 200 lbs (91 kg)

Screw speci cations

Screw material
MDrive Linear Actuator precision rolled lead screws are designed speci cally for motion control applications to deliver maximum life and quiet operation. Corrosion resistant and non-magnetic, screws are manufactured from premium grade stainless steel.

Screw coating
An optional te on screw coating is available for smooth operation and extended life.

Standard screw
Dimensions in inches (mm)

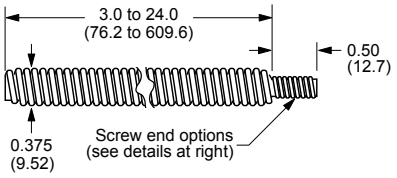

Lead options

inches (mm)	Travel/revolution		Travel/full step	
Screw G	0.3750	(9.525)	0.001875	(0.0476)
Screw A	0.200	(5.08)	0.001	(0.0254)
Screw B	0.1670	(4.233)	0.000835	(0.0212)
Screw D	0.0833	(2.116)	0.0004165	(0.0106)

Screw end options

Threaded end	Metric end: M6 x 1.0mm thread to within 0.03" (0.76mm) of shoulder	UNC end: 1/4-20 UNC-2A thread to within 0.05" (1.3mm) of shoulder
Smooth end	Ø 0.2362" ±0.001 (Ø 6mm ±0.003)	
None	—	

Cantilevered loads

Unsupported loads and side loading are not recommended for non-captive shaft MDrive® linear actuator products.

Calculating screw length

Screw length = [mounting surface plate thickness] + [1.8" (45.7mm)] + [desired stroke length]

Figure 2.1 Non-captive shsft mechanical speci cations

2.1.2 External Shaft

2.1.2 External Shaft

Side view

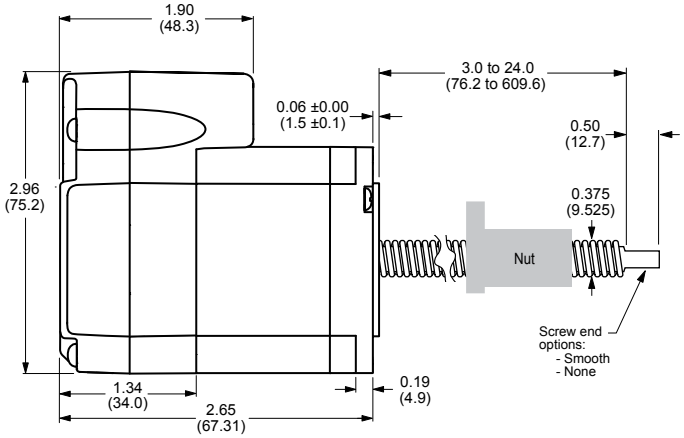

Front view

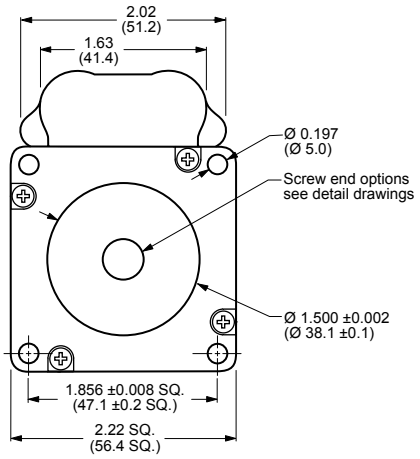

Nut detail / load limit

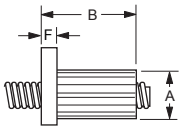

General purpose nut
Flange shape: round
Load limit: 60 lbs (27 kg)
Purpose: for applications not requiring anti-backlash and wear compensation.

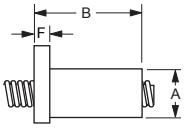

Anti-backlash nut
Flange shape: triangle
Load limit: 25 lbs (11 kg)
Purpose: backlash free operation for high accuracy and low drag torque.

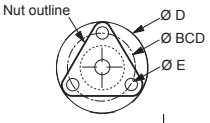

inches (mm)	A	B	D	E	F	BCD	*load limit*	*drag torque*
General purpose	0.71 (18.0)	1.50 (38.1)	1.5 (38.1)	0.20 (5.08)	0.20 (5.08)	1.125 (28.6)	60lbs/ 27kg	free wheeling
Anti-backlash	0.82 (20.8)	1.875 (47.63) max	1.5 (38.1)	0.20 (5.08)	0.20 (5.08)	1.125 (28.6)	25lbs/ 11kg	1–3

Screw specifications

Screw material

MDrive Linear Actuator precision rolled lead screws are corrosion resistant and non-magnetic, manufactured from premium grade stainless steel.

Screw coating

An optional te on screw coating is available for smooth operation and extended life.

Standard screw

Dimensions in inches (mm)

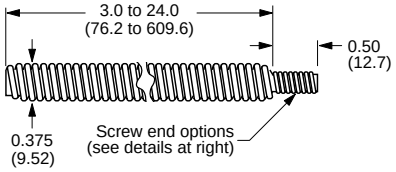

Lead options

inches (mm)	Travel/revolution		Travel/full step	
Screw G	0.3750	(9.525)	0.001875	(0.0476)
Screw A	0.200	(5.08)	0.001	(0.0254)
Screw B	0.1670	(4.233)	0.000835	(0.0212)
Screw D	0.0833	(2.116)	0.0004165	(0.0106)

Screw end options

Threaded end	Metric end: M6 x 1.0mm thread to within 0.03" (0.76mm) of shoulder	UNC end: 1/4-20 UNC-2A thread to within 0.05" (1.3mm) of shoulder
Smooth end	Ø 0.2362" ±0.001 (Ø 6mm ±0.003)	
None	—	

Cantilevered loads

Loads for external shaft MDrive® linear actuator products MUST BE supported. Side loading is not recommended.

Calculating stroke length

Available stroke length = [screw length] – [nut length] – [mounting surface plate thickness]

Figure 2.2 External shaft mechanical speci cations

2.2 General speci cations

2.2.1 Electrical speci cations

	Condition	Min	Typ	Max	Unit
Input voltage range	Single, double and triple lengthe motors	+12	—	+75	VDC
	Quad length motor	+12		+60	
Max power supply current*	Single, double and triple length motors			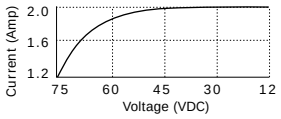	
	Quad length ,motor			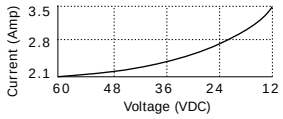	

**per MDrive 23 Linear Actuator, Actual current depends on voltage and load.*

Table 2.1 Electrical speci cations

3.2.2 Logic speci cations

	Condition	Min	Typ	Max	Unit
Universal Inputs					
Isolated input voltage range (sourcing or sinking)	Isolated inputs	+5	—	+24	VDC
Current	+5 VDC max	—	—	8.7	mA
Current	+24 VDC max	—	—	14.6	mA
Differential Inputs					
Voltage range	—	0	—	+5	VDC
High level input voltage	—	+3.75	—	+5.75	VDC
Low level input voltage	—	—	—	≤+1.2	VDC

Table 2.2 I/O speci cations

3.2.3 Communications speci cations

Protocol	SPI

Table 2.3 Communications speci cations

3.2.4 Thermal speci cations

		Min	Typ	Max	Unit
Heat sink temperature	non-condensing humidity	-40	—	+85	ºC
Motor temperature	non-condensing humidity	-40	—	+100	ºC

Table 2.4 Thermal speci cations

3.2.5 Motion speci cations

Number of microstep resolutions	20

Available microsteps per revolution

200	400	800	1000	1600	2000	3200	5000	6400	10000
12800	20000	25000	25600	40000	50000	51200	36000[1]	21600[2]	25400[3]

1=0.01 deg/µstep 2=1 arc minute/µstep *3=0.001 mm/µstep
** 1" per revolution lead screw*

Digital filter range	50 ns to 12.9 µs (10 MHz to 38.8 kHz)
Clock types	step/direction, up/down, quadrature
Step frequency (max)	5 MHz
Step frequency minimum pulse width	100 ns

Table 2.5 Motion speci cations

2.2.8 Motor speci cations

Holding torque		90 oz-in (64 N-cm)
Rotor inertia		0.0025 oz-in-sec^2 (0.18 kg-cm^2)
Maximum thrust (Non-captive)	General purpose	200 lbs (91 kg)
	With anti-backlash nut	—
Maximum thrust (External)	General purpose	60 lbs (27 kg)
	With anti-backlash nut	25 lbs (11 kg)
Maximum repeatability (Non-captive)	General purpose	0.005" (0.127 mm)
	With anti-backlash nut	—
Maximum repeatability (External)	General purpose	0.005" (0.127mm)
	With anti-backlash nut	0.0005" (0.0127 mm)
Maximum screw misalignment		± 1°
Wieght without screw		22.0 oz (625.0 g)

Table 2.8 MDrive 23 linear actuator speci cations

2.2.9 Speed-force performance curves

+24 VDC

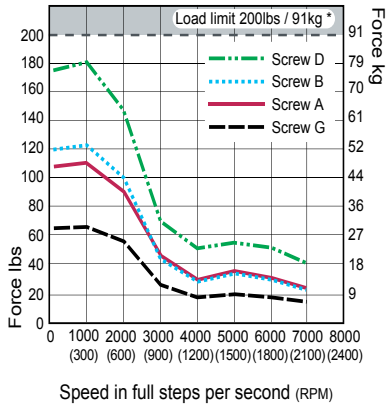

Figure 2.3 Motor performance curve — +24 VDC

+48 VDC

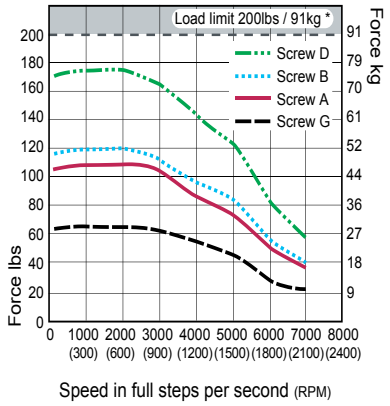

Figure 2.4 Motor performance curve — +48 VDC

+75 VDC

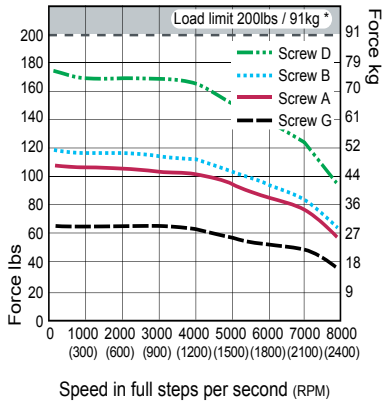

Figure 2.5 Motor performance curve — +75 VDCr

2.3 Connectivity speci cations/pin assignments - Communications

2.3.1 SPI communications - connector P2

⚠ CAUTION

+5VDC OUTPUT

The +5 VDC output on connector P2 is for the express purpose of powering the IMS isolated communications converter cables. Do not use to power external devices.

Failure to follow these instructions may result in damage to system components!

If using the model MDrive with the 12-pin locking wire crimp or M23 circular connector at connector position P1, the P2 connector is eliminated and SPI communications are bundled with power and logic.

10-pin fIDC style connector

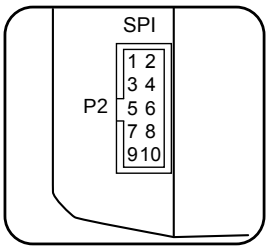

Connectivity Options
USB to SPI Converter:
MD-CC300-001

Mating connector kit:
CK-01 (ribbon cable not included)

Mfg P/N:
Shell
SAMTEC TSD-05-01-N

Ribbon cable
Tyco: 1-57051-9

Pin #	Function	Description
1	N/C	Not connected
2	N/C	Not connected
3	N/C	Not connected
4	CS	SPI chip select, selected when low.
5	GND	Communications ground
6	+5V	+ 5 VDC output. Used to power the IMS communications converter ONLY! Not for general purpose use.
7	MOSI	SPI master out - slave in
8	CLK	SPI clock
9	N/C	Not connected
10	MISO	SPI master in - slave out

Table 2.7 P2 communications, 10-pin IDC

2.4 Connectivity speci cations/pin assignments - power and logic

2.4.1 Power and logic (universal inputs)

12” (304.8 mm) flying leads

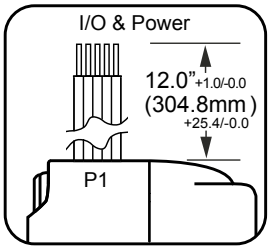

Wire Color	Function	Description
White	Opto	Optocoupler reference
Orange	Step clock	Step clock input
Blue	Direction	CW/CCW direction input
Brown	Enable	Output bridge enable input
Black	GND	Power ground
Red	+V	+12 to +75 VDC motor power

Table 2.8 Power and logic interface - 12” (308.8.mm) ying leads

7-pin pluggable terminal

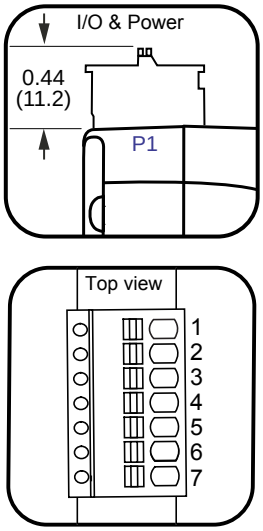

Pin #	Function	Description
1	Opto	Optocoupler reference
2	N/C	Not connected
3	Step clock	Step clock input
4	Direction	CW/CCW direction input
5	Enable	Output bridge enable input
6	GND	Power ground
7	+V	+12 to +75 VDC motor power

Table 2.9 Power and logic interface - 7-pin pluggable terminal

2.4.2 Power and logic (differential inputs)

⚠ CAUTION

ELECTRICAL OVERSTRESS

The universal logic inputs are tolerant to +24 VDC. The differential input version inputs are TTL level and only tolerent to +5 VDC:

Do not exceed +5 VDC on the differential inputs.

Failure to follow these instructions can result in equipment damage.

12" (304.8 mm) flying leads

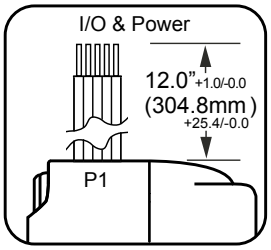

Wire Color	Function	Description
White	CW +	Clockwise plus input
Orange	CW -	Clockwise minus input
Blue	CCW -	Counter-clockwise minus input
Brown	CCW +	Counter-clockwise plus input
Black	GND	Power ground
Red	+V	+12 to +75 VDC motor power

Table 2.10 Power and logic interface - 12" (308.8.mm) y-ing leads

7-pin pluggable terminal

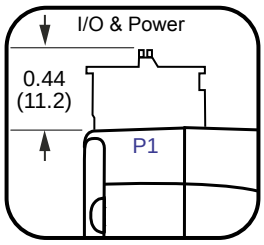

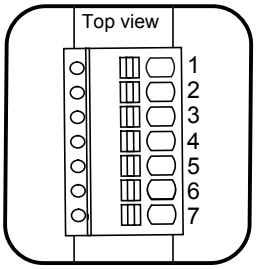

Pin #	Function	Description
1	CW +	Clockwise plus input
2	N/C	Not connected
3	CW -	Clockwise minus input
4	CCW -	Counter-clockwise minus input
5	CCW +	Counter-clockwise plus input
6	GND	Power ground
7	+V	Motor power

Table 2.11 Power and logic interface - 7-pin pluggable terminal

2.4.3 Power, logic and communications — 12-pin wire crimp (universal input)

⚠ CAUTION

CONNECTOR PRODUCT ALERT!

The manufacturer of the Tyco 12-pin connector has begun marking the connector shell, PN 1-794617-2. with pin numbers as shown in the diagram on the right.

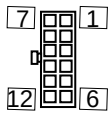

Disregard these markinings

Disregard these pin number markings. Use the pin numbering scheme as shown below.

Failure to follow these instructions can result in equipment damage.

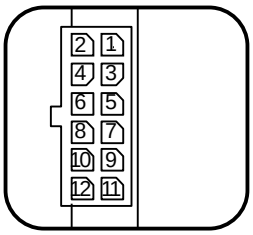

Connectivity Options
USB to SPI Converter:
MD-CC303-001

Prototype development cable:
PD12-1434-FL3

Mating connector kit:
CK-03

Mfg P/N:
Shell
Tyco: 1-794617-2

Pins
Tyco: 794610-1

Pin #	Function	Description
1	GND	Motor power supply return (ground)
2	+V	+12 to +75 VDC motor power
3	OPTO	Optocoupler power supply input
4	SCLK	Step Clock input
5	EN	The Enable Input can be used to enable or disable the driver output circuitry.
6	DIR	The direction Input controls the clockwise/ counterclockwise direction of the motor. It may be configured as sinking or sourcing depending on the state of the Optocoupler Reference.
7	+5 VDC	+5 VDC output. This output is only to be used to power the optional communications converter cable MD-CC305-001. Do not use to power external devices.
8	CLK	SPI Clock
9	CGND	Communications ground
10	MOSI	SPI Master In - Slave Out
11	CS	SPI Chip Select input
12	MISO	SPI Master In - Slave Out

Table 2.12 P1 Power, logic and communications

2.4.5 Power, logic and communications (differential input)

⚠ CAUTION

ELECTRICAL OVERSTRESS

The universal logic inputs are tolerant to +24 VDC. The differential input version inputs are TTL level and only tolerent to +5 VDC:

Do not exceed +5 VDC on the differential inputs.

Failure to follow these instructions can result in equipment damage.

⚠ CAUTION

CONNECTOR PRODUCT ALERT!

The manufacturer of the Tyco 12-pin connector has begun marking the connector shell, PN 1-794617-2. with pin numbers as shown in the diagram on the right.

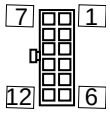

Disregard these markinings

Disregard these pin number markings. Use the pin numbering scheme as shown below.

Failure to follow these instructions can result in equipment damage.

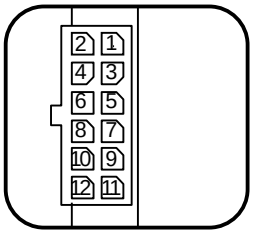

Connectivity Options
USB to SPI Converter:
MD-CC303-001

Prototype development cable:
PD12-1434-FL3

Mating connector kit:
CK-03

Mfg P/N:
Shell
Tyco: 1-794617-2

Pins
Tyco: 794610-1

Pin #	Function	Description
1	GND	Motor power supply return (ground)
2	+V	+12 to +75 VDC motor power
3	CW+	Positive clockwise input
4	CW-	Negative clockwise input
5	CCW+	Positive counter-clockwise input
6	CCW-	Negative counter-clockwise input
7	+5 VDC	+5 VDC output. This output is only to be used to power the optional communications converter cable MD-CC303-001. Do not use to power external devices.
8	CLK	SPI Clock
9	CGND	Communications ground
10	MOSI	SPI Master In - Slave Out
11	CS	SPI Chip Select input
12	MISO	SPI Master In - Slave Out

Table 2.13 P1 Power, logic and communications

2.5 Connectivity speci cations/pin assignments - internal encoder

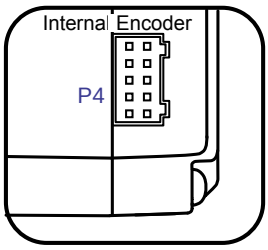

Pin #	Function	Description
1	GND	Encoder ground
2	CH A+	Channel A positive input
3	CH A-	Channel A negative input
4	CH B+	Channel B positive input
5	CH B-	Channel B negative input
6	IDX+	Index mark positive input
7	IDX-	Index mark negative input
8	N/C	Not connected
9	N/C	Not connected
10	N/C	Not connected

Table 2.14 P1 Power, logic and communications

2.5 Options

Drive Protection Module

The function of the DPM75 Drive Protection Module is to limit the surge current and voltage to a safe level when DC input power is switched on and off to the MDrive

Internal encoder

Internal differential magnetic encoders with index mark are available with the MDrive Microstepping.

Line counts available: 100, 200, 250, 256, 400, 500, 512, 800, 1000

2.6 Connectivity

QuickStart kit

For rapid design veri cation, all-inclusive QuickStart Kits have communication converter, prototype development cable(s), instructions and CD for MDrive Microstepping initial functional setup and system testing.

Communication Converters

Electrically isolated, in-line converters pre-wired with mating connectors to conveniently set/program communication parameters for a single MDrive product via a PC's USB port. Length 12.0' (3.6m).

Mates to connector:

P2 10-pin IDC MD-CC300-001

P1 12 pin locking wire crimp MD-CC303-001

Prototype Development Cables

Speed test/development with pre-wired mating connectors that have y-ing leads other end. Length 10.0' (3.0m).

Mates to connector:

P1 12-pin locking wire crimp PD12-1434-FL3

P4 10-pin wire crimp (encoder) ED-CABLE-JST10

Mating Connector Kits

Use to build your own cables. Kit contains 5 mating shells with pins. Cable not supplied. Manufacturer's crimp tool recommended.

Mates to connector:

P2 10-pin IDC CK-01

P1 12-pin wire crimp CK-03

P4 10-pin wire crimp CK-13

3 Mounting and connection recommendations

⚠ DANGER

EXPOSED SIGNALS

Hazardous voltage levels may be present if using an open frame power supply to power the product.

Failure to follow these instructions will result in death or serious injury.

⚠ CAUTION

SWITCHING DC POWER/HOT PLUGGING

Do not connect or disconnect power, logic, or communications while the device is in a powered state.

Remove DC power by powering down at the AC side of the DC power supply.

Failure to follow these instructions can result in equipment damage.

⚠ CAUTION

LEAD RESTRAINT

Some MDrive mounting con gurations require that the MDrive move along the screw. Ensure that all cabling is properly re-strained to provide strain relief on connection points..

Failure to follow these instructions can result in equipment damage.

⚠ CAUTION

THERMAL MANAGEMENT

The mounting plate material should offer suf cient mass and thermal conductivity to ensure that the motor temperature does not eceed 100°C.

Failure to follow these instructions can result in equipment damage.

Revision R031910

3.1 Mounting

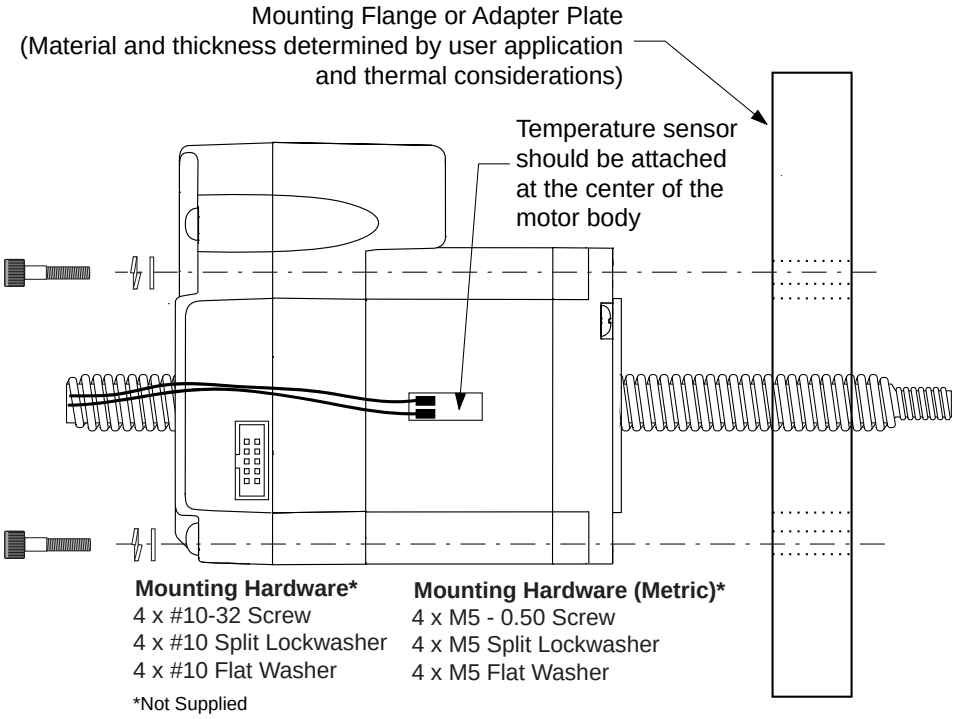

Drill Pattern

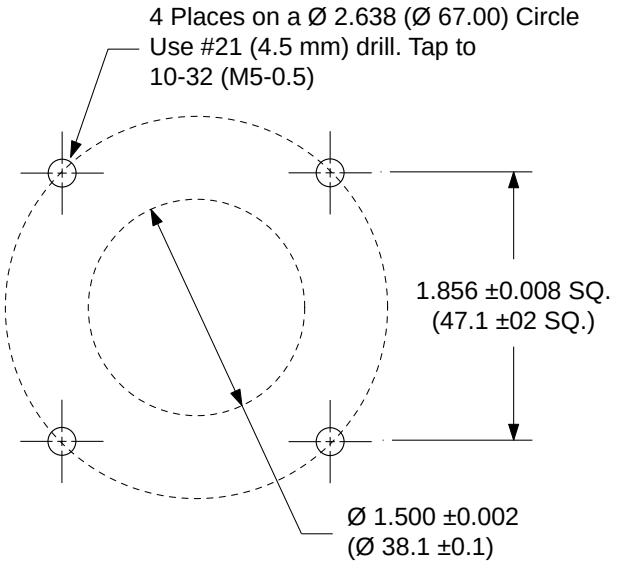

Figure 3.1 MDrive 23Plus mounting and drill pattern

3.2 Layout and interface guidelines

Logic level cables must not run parallel to power cables. Power cables will introduce noise into the logic level cables and make your system unreliable.

Logic level cables must be shielded to reduce the chance of EMI induced noise. The shield needs to be grounded at the signal source to earth. The other end of the shield must not be tied to anything, but allowed to oat. This allows the shield to act as a drain.

Power supply leads to the MDrive need to be twisted. If more than one driver is to be connected to the same power supply, run separate power and ground leads from the supply to each driver.

3.2.1 Rules of wiring

- Power supply and motor wiring should be shielded twisted pairs, and run separately from signal-carrying wires.
- A minimum of one twist per inch is recommended.
- Motor wiring should be shielded twisted pairs using 20 gauge, or for distances of more than 5 feet, 18 gauge or better.
- Power ground return should be as short as possible to established ground.
- Power supply wiring should be shielded twisted pairs of 18 gauge for less than 4 amps DC and 16 gauge for more than 4 amps DC.

3.2.2 Rules of shielding

- The shield must be tied to zero-signal reference potential. It is necessary that the signal be earthed or grounded, for the shield to become earthed or grounded. Earthing or grounding the shield is not effective if the signal is not earthed or grounded.
- Do not assume that Earth ground is a true Earth ground. Depending on the distance from the main power cabinet, it may be necessary to sink a ground rod at the critical location.
- The shield must be connected so that shield currents drain to signal-earth connections.
- The number of separate shields required in a system is equal to the number of independent signals being processed plus one for each power entrance.
- The shield should be tied to a single point to prevent ground loops.
- A second shield can be used over the primary shield; however, the second shield is tied to ground at both ends.

Revision R031910

3.3 Recommended wiring

The following wiring/cabling is recommended for use with the MDrive 23 Linear Actuator:

Logic Wiring..... 22 AWG

Wire Strip Length..... 0.25” (6.0 mm)

Power and Ground ..... 20 AWG

3.3.1 Recommended mating connectors and pins

Communications

10-pin IDC (P2)..... SAMTEC TCSD-05-01-N

Recommended ribbon cable..... Tyco 1-57051-9

Logic and Power

The following mating connectors are recommended for the MDrive

12-pin Locking Wire Crimp Connector Shell..... Tyco 1-794617-2

Crimp Pins..... Tyco 794610-1

3.4 Securing power leads and logic leads

Some applications may require that the MDrive move with the axis motion. If this is a requirement of your application, the motor leads (ying, pluggable or threaded) must be properly anchored. This will prevent exing and tugging which can cause damage at critical connection points within the MDrive.

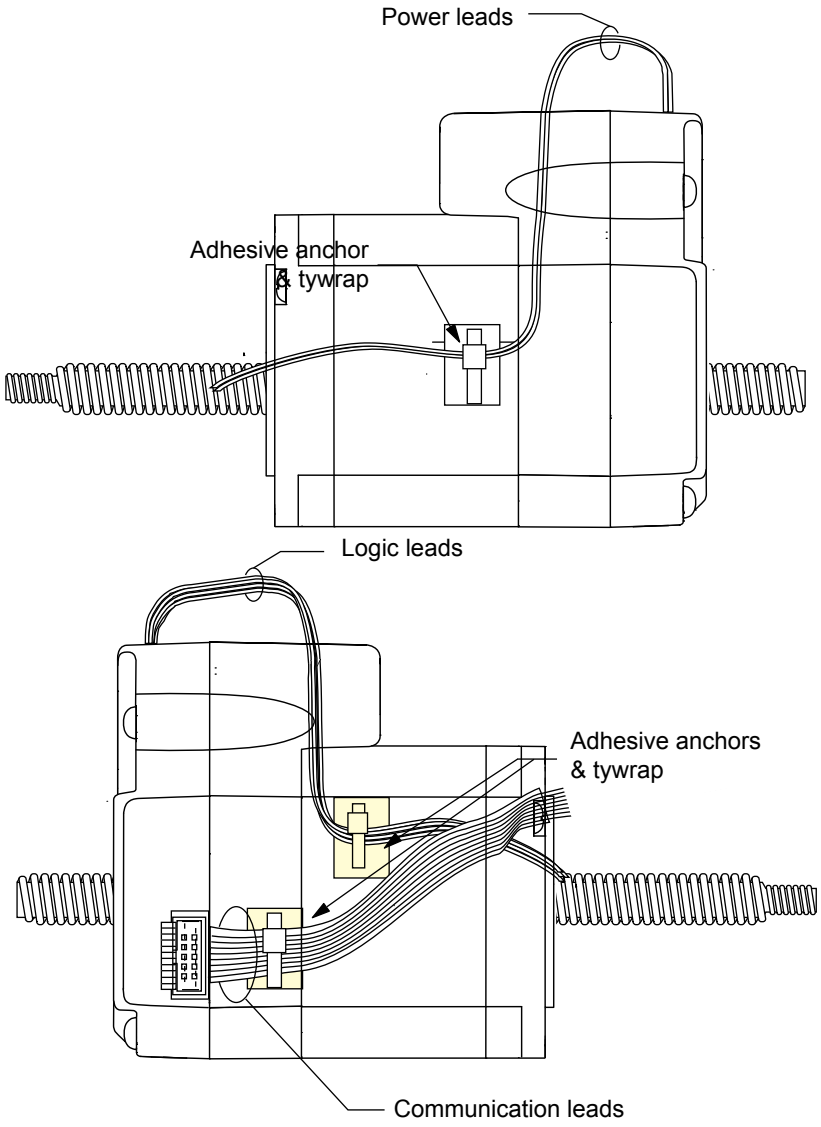

Figure 3.2 Securing leads

3.5 Anti-Backlash nut assembly and installation

3.5.1 Notes and warnings

- Do not use a wrench on the stainless steel cam of the nut.
- Do not oil the mechanism of the nut.
- Do not install the note into an interference t bore (mechanism will not work).

3.5.2 Installation

To install threaded model nuts, simply hand tighten until shoulder is ush with mounting surface. A small amount of Loctite thread compound such as #277 can be used to prevent loosening. Alternatively, a pin can be installed to mechanically lock the threads.

Flanged models can be mounted to either the front or rear face of the ange.

Before use, it is recommended that the stainless steel preload mechanism be turned so that the caming surfaces move down the ramps. Once play is felt, allow the mechanism to slowly unwind again to establish the proper preload. (It is possible in assembly to inadvertently twist the cam creating excessive drag torque. This procedure will correct this.)

Using lubricant on the lead screw threads is recommended. This extends the life of the nut and reduces heat generation, noise and vibration. TriGEL-300S or TriGEL-1200SC is recommended.

3.5.3 Removal from screw

If it is necessary to remove the nut from your screw, you may lock the mechanism so that it can be immediately reinstalled without re-setting the preload. This can be done by wrapping tape around the junction between the stainless steel cam and the plastic nut halves. This will prevent the cam from turning when the nut is removed from screw. Remember to remove tape after installation.

For immediate transfer from one screw to another, hold the nut together between your thumb and fore nger so that it cannot expand axially. Remove the nut and install it on the second screw. It may be helpful to prevent the cam from turning with your remaining ngers as you transfer. If the nut becomes disassembled or looses its preload for any reason, follow the steps listed in the assembly procedure below.

3.5.4 Assembly procedure

1) Insert spring tang into cam slot.

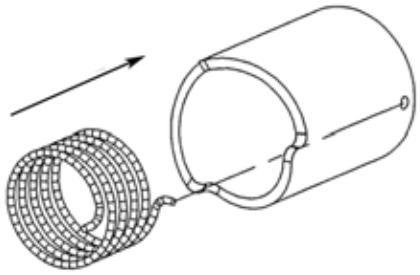

Figure 3.3 Insert spring tang

2) Ensure that the spring is engaged.

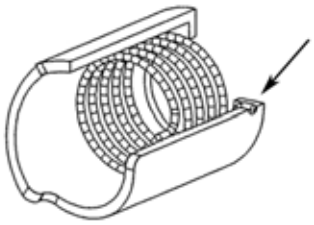

Figure 3.4 Spring engaged

3) Insert opposite tang into front nut slot or hole (dependant on size). Use the slot or hole that will allow the the cam to be positioned closest to the bottom of the ramp.

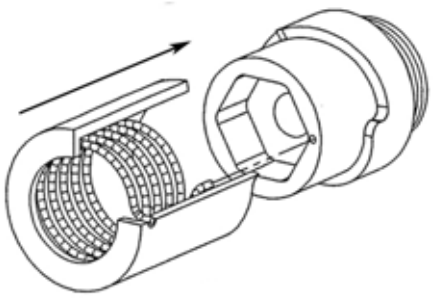

Figure 3.5 Insert opposite tang

1) With washer installed, insert the back nut into the front nut.

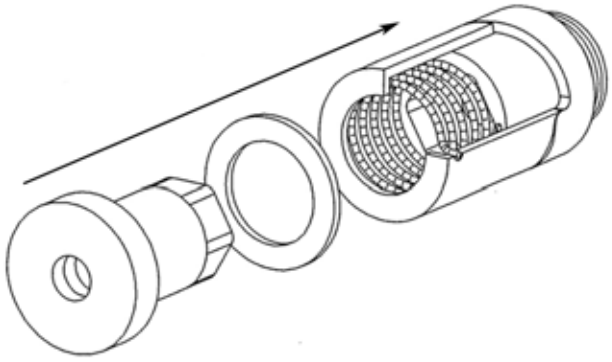

Figure 3.6 Inserting the back nut

2) With the cam held at the bottom of the ramp, thread the entire nut onto the screw starting with the front nut. After the entire nut is threaded onto the screw, release the cam to observe the gap distance (X on the drawing). The gap distance (X) should be about one-third of the full ramp distance, but no more than half.

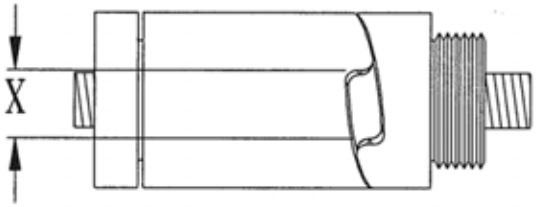

Figure 3.7 Measuring the gap distance

3) If the gap distance is incorrect, unthread the nut just enough to allow the back nut to disengage from the screw. Pull the back nut off and rotate to the next index position and reinsert back into the front nut. With the cam held at the bottom of the ramp, thread the entire nut back onto the screw. Release the cam and verify the correct gap distance. If still not correct repeat this step.

4) Once the back nut has been properly clocked to yield the correct gap distance, unthread the nut again just enough to disengage the back nut from the screw, but do not remove from the nut. Pull the cam away from the ramp and rotate in the clockwise direction for two ramp settings, then hold the cam at the bottom of the second ramp. Be careful not to allow the back nut to rotate with respect to the front nut while completing this task. With the cam held at the bottom of the second ramp, push the back nut into the front nut and thread the entire nut onto the screw.

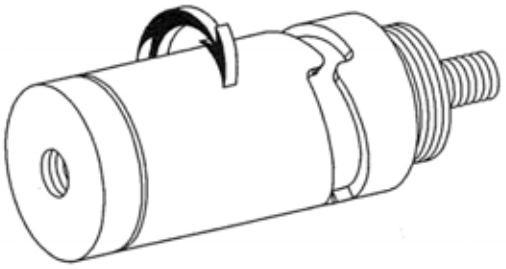

Figure 3.8 Pre-loading the nut

5) The anti-backlash nut is now pre-loaded and fully assembled.

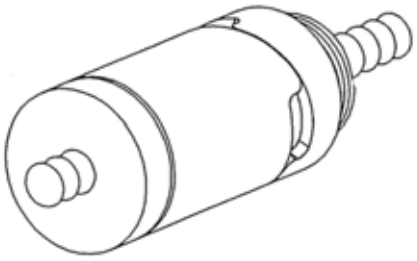

Figure 3.9 Nut pre-loaded and fully assembled

This page intentionally left blank

4 Connection and interface

⚠ DANGER

EXPOSED SIGNALS

Hazardous voltage levels may be present if using an open frame power supply to power the product.

Failure to follow these instructions will result in death or serious injury.

⚠ CAUTION

SWITCHING DC POWER/HOT PLUGGING

Do not connect or disconnect power, logic, or communications while the device is in a powered state.

Remove DC power by powering down at the AC side of the DC power supply.

Failure to follow these instructions can result in equipment damage.

⚠ CAUTION

CONNECTOR PRODUCT ALERT!

The manufacturer of the Tyco 12-pin connector has begun marking the connector shell, PN 1-794617-2. with pin numbers as shown in the diagram on the right.

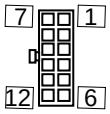

Disregard these markinings

Disregard these pin number markings. Use the pin numbering scheme as shown below.

Failure to follow these instructions can result in equipment damage.

4.1 Interfacing communications

SPI communications may be interfaced using one of two possible connector options:

1. 10-pin wire crimp connector at P2
2. 12-pin locking wire crimp connector at P1
3. 19-pin M23 circular connector at P1

If using the 12-pin locking wire crimp connector or M23 circular at P1, there will be no P2 connector. The P1 option will bundle power, logic and communications on a single connector.



For general SPI communications methods and practices please see Part 1, Section 5 of this document.

If using the model MDrive with the 12-pin locking wire crimp connector at connector position P1, the P2 connector is eliminated and SPI communications are bundled with power and logic.

4.1.1 P2 - 10-pin IDC style connector

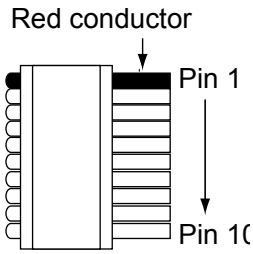

Pin #	Function	Description
1	N/C	Not connected
2	N/C	Not connected
3	N/C	Not connected
4	CS	SPI chip select, selected when low.
5	GND	Communications ground
6	+5V	+ 5 VDC output. Used to power the IMS communications converter ONLY! Not for general purpose use.
7	MOSI	SPI master out - slave in
8	CLK	SPI clock
9	N/C	Not connected
10	MISO	SPI master in - slave out

Table 4.1 Communications connections, P2 - 10-pin IDC

Connectivity accessories

Mating connector kit CK-01
(contains 5 connector shells, ribbon cable not included)

Communications converter cable (10'/3.0 m).....MD-CC300-001

Manufacturer (SAMTEC) part numbers

Connector shell.....TCSD-05-01-N

Ribbon cable.....Tyco 1-57051-9

4.1.2 P1 - 12-pin wire crimp connector

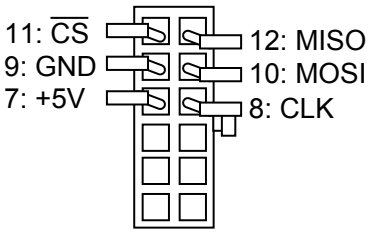

Pin #	*Signal*	*Wire colors*	
		MD-CC303-001	PD12-1434-FL3
7	+ 5 VDC output	—	White/brown
8	SPI clock	—	White/green
9	Comm ground	—	Green/white
10	SPI MOSI	—	White/gray
11	SPI chip select	—	Gray/white
12	SPI MISO	—	Brown/white

Table 4.2 Communications connections, 12-pin locking wire crimp

Connectivity accessories

Mating connector kit CK-03
(contains 5 connector shells and the appropriate quantity of pins to make 5 cables)

Prototype development cable (10'/3.0 m)..... PD12-1434-FL3

Manufacturer (Tyco) part numbers

Connector shell.....1-794617-2

Pins.....794610-1

4.3 Interfacing DC power

See part 1 of this document, section 3, for recommended power cable con gurations.

⚠ CAUTION

OVER VOLTAGE

The DC voltage range for the MDrive 23 Linear Actuator is +12 to +75 VDC for single, double and triple length motors, +12 to +60 VDC for quad length motors. Ensure that motor back EMF is factored into your power supply size calculations.

Allow 3.0 A maximum power supply output current per MDrive 23 Linear Actuator in the system. Actual power supply current will depend on voltage and load.

Failure to follow these instructions can result in equipment damage.

4.2.1 Recommended power supply characteristics

Voltage range	+12 to +75 VDC
Type	Unregulated linear
Ripple	± 5%
Output current	2.0 A (per MDrive 23)

Table 4.3 Recommended power supply characteristics

4.2.2 Recommended wire gauge

Cable Length: Feet (meters)	10 (3.0)	25 (7.6)	50 (15.2)	75 (22.9)	100 (30.5)
Amps Peak	**Minimum AWG**				
1 Amp Peak	20	20	18	18	18
2 Amps Peak	20	18	16	14	14
3 Amps Peak	18	16	14	12	12

Table 4.4 Recommended power supply wire gauge

4.3.3 P1 — 12’ (30.5 cm) ying leads interface

Wire Color	
Red	Motor power supply
Black	Power ground

Table 4.5 Power and ground connections, ying leads

4.3.4 P1 — 7-pin pluggable terminal interface

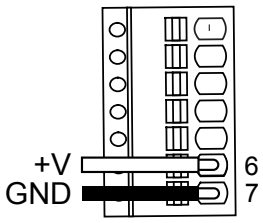

Pin #	
6	Power ground
7	Motor power supply

Table 4.6 Power and ground connections, 7-pin terminal

4.3.5 P1 — 12-pin locking wire crimp interface

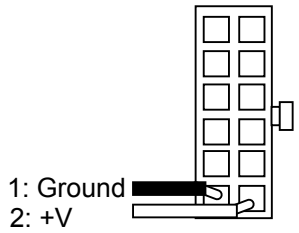

Pin #	*Signal*	*Wire colors*	
		MD-CC303-001	PD12-1434-FL3
2	Motor power supply	Red	Red
1	Power ground	Black	Black

Table 4.7 Power and ground connections, 12-pin locking wire crimp

Connectivity accessories

Mating connector kit CK-03
(contains 5 connector shells and the appropriate quantity of pins to make 5 cables)

Prototype development cable (10'/3.0 m)..... PD12-1434-FL3

Manufacturer (Tyco) part numbers

Connector shell.....1-794617-2

Pins.....794610-1

4.3.7 Power Interface using Drive Protection Module DPM75

The DPM75 Drive Protection Module will limit surge currents for up to two (2) MDrive 23 units at up to 75 VDC to allow switching DC Power.

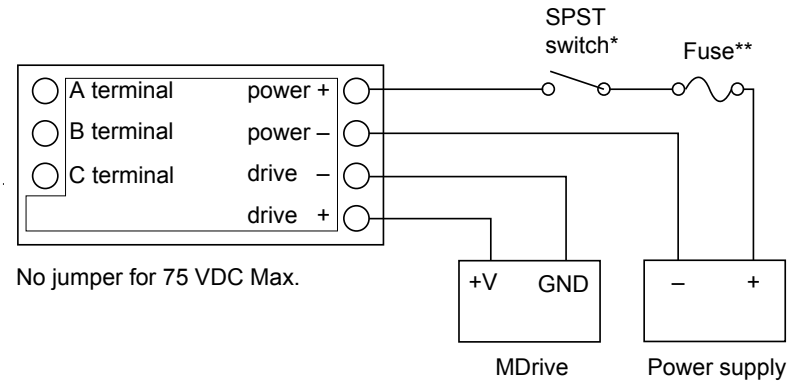

* Do not switch negative side of supply
**Fuse = 6.3 Amp slow blow (recommended: Bussman S505-6.3A or Littelfuse 215006.3). The fuse is optional.

Figure 4.1 DPM75 Drive Protection Module

4.4 Interfacing Logic (universal input)

See part 1 of this document, section 6, for logic interface con gurations and methods.

4.4.1 P1 — 12’ (30.5 cm) ying leads interface

Wire Color	*Signal*
White	Opto reference
Orange	CW/CCW direction input
Blue	Step clock input
Brown	Enable input

Table 4.8 Universal input connections, ying leads

4.4.2 P1 — 7-pin pluggable terminal interface

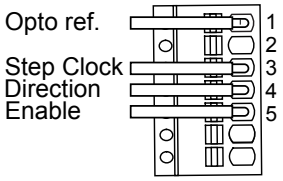

Pin #	*Signal*
1	Opto reference
3	CW/CCW direction input
4	Step clock input
5	Enable input

Table 4.9 Universal input connections, 7-pin terminal

4.4.3 P1 — 12-pin locking wire crimp

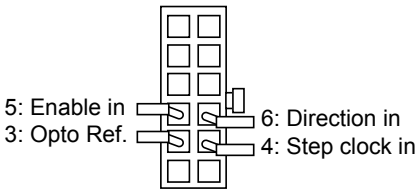

Pin #	*Signal*	*Wire colors*	
		MD-CC303-001	PD12-1434-FL3
3	Opto reference	White	White/blue
4	Step clock input	Green	Blue/white
5	Enable input	Orange	White/orange
6	Direction input	Blue	Orange/white

Table 4.10 Universal input connections, 12-pin locking wire crimp

Connectivity accessories

Mating connector kit CK-03
(contains 5 connector shells and the appropriate quantity of pins to make 5 cables)

Prototype development cable (10’/3.0 m)..... PD12-1434-FL3

Manufacturer (Tyco) part numbers

Connector shell.....1-794617-2

Pins.....794610-1

Revision R031910

4.5 Interfacing Logic (differential inputs)

⚠ CAUTION

ELECTRICAL OVERSTRESS

The universal logic inputs are tolerant to +24 VDC. The differential input version inputs are TTL level and only tolerant to +5 VDC:

Do not exceed +5 VDC on the differential inputs.

Failure to follow these instructions can result in equipment damage.

4.5.1 P1 — 12’ (30.5 cm) ying leads interface

Wire Color	*Signal*
White	CW +
Orange	CW —
Blue	CCW —
Brown	CCW +

Table 4.11 Differential input connections, ying leads interface

4.5.2 P1 — 7-pin pluggable terminal interface

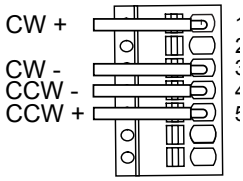

Pin #	Signal
1	CW +
3	CW —
4	CCW —
5	CCW +

Table 4.12 Differential input connections, 7-pin terminal

4.5.3 P1 — 12-pin locking wire crimp

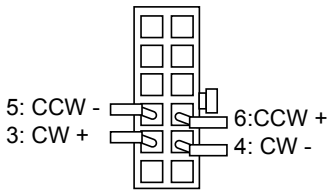

Pin #	Signal	Wire colors	
		MD-CC303-001	PD12-1434-FL3
3	CW +	White	White/blue
4	CW —	Green	Blue/white
5	CCW —	Orange	White/orange
6	CCW +	Blue	Orange/white

Table 4.13 Differential input connections, 12-pin locking wire crimp

Connectivity accessories

Mating connector kit CK-03
(contains 5 connector shells and the appropriate quantity of pins to make 5 cables)

Prototype development cable (10'/3.0 m)..... PD12-1434-FL3

Manufacturer (Tyco) part numbers

Connector shell.....1-794617-2

Pins.....794610-

4.6 Encoder interface

4.6.1 P4 — 10-pin wire crimp

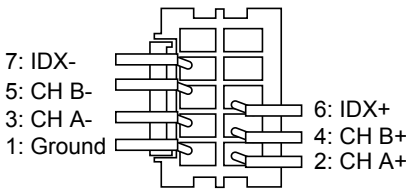

Pin #	*Signal*	*Wire color*
		ED-CABLE-JST10
1	GND	White/Brown
2	CH A+	White/green
3	CH A-	Green/white
4	CH B+	White/orange
5	CH B-	Orange/white
6	IDX+	White/blue
7	IDX-	Blue/white
8	No Connect	Brown/white

Table 4.14 P4 - Encoder interface

4.7 USB to SPI communications converters

4.7.1 USB to 10-pin IDC — MD-CC300-001

Electrically isolated in-line USB to SPI converter pre-wired with mating connector to conveniently program and set con guration parameters

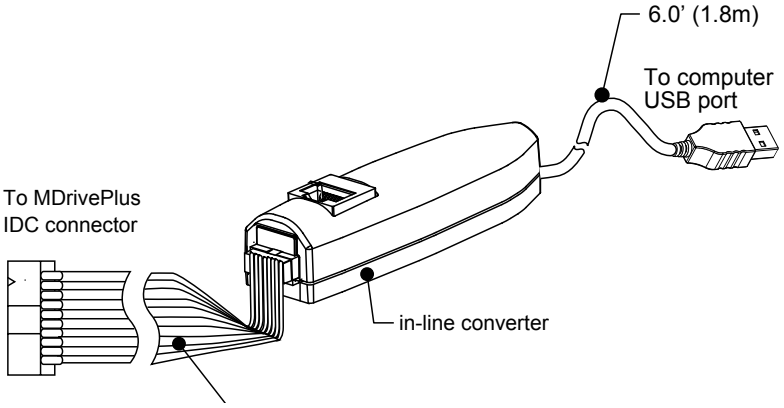

Figure 4.2 MD-CC300-001 communications converter cable

4.7.2 USB to 12-pin wire crimp — MD-CC303-001

Electrically isolated in-line USB to SPI converter pre-wired with mating connector to conveniently program and set con guration parameters. Power and logic signals are bundled into this connector via a second cable with signal accessibility via ying leads.

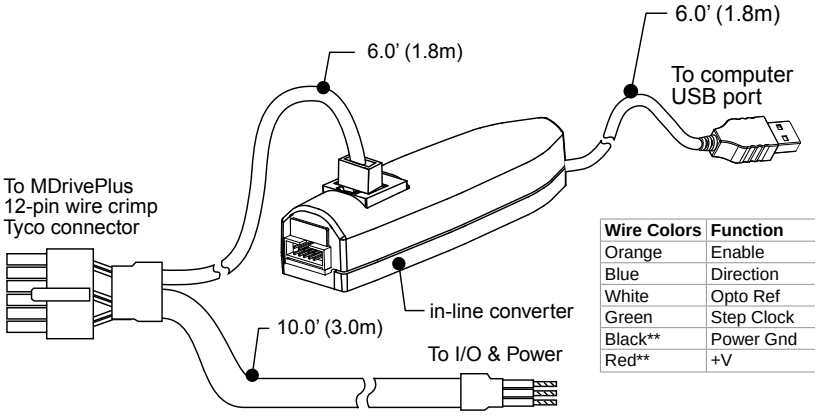

Wire Colors	Function
Orange	Enable
Blue	Direction
White	Opto Ref
Green	Step Clock
Black**	Power Gnd
Red**	+V

Figure 4.3 MD-CC303-001 communications converter cable

4.8 Prototype development cables

4.8.1 P1 — 12-pin locking wire crimp PD12-1434-FL3

The PD12-1434-FL3 prototype development cable is used to rapidly interface the MDrive to the users power, communications and logic interface. This 10’ (3.0 m) cable consists of a 12-pin locking wire crimp connector to plug directly into the MDrive P1 connector with ying leads on the opposite end to interface to power, communications and logic.

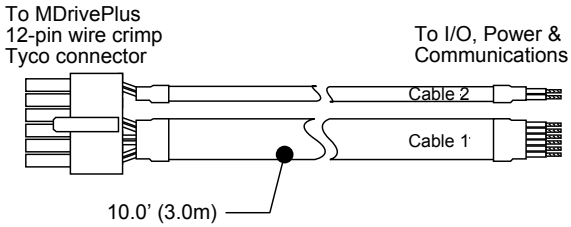

Wire Colors	Function
Gray/White	Chip Select
White/Gray	SPI MOSI
White/Brown	+5 VDC
Brown/White	SPI MISO
White/Green	SPI Clock
Green/White	Comm Gnd
White/Orange	Enable
Orange/White	Direction
White/Blue	Opto Ref
Blue/White	Step Clock
Black	Power Gnd
Red	+V
Uninsulated	Drain Wire

Figure 4.4 Prototype development cable PD12-1434-FL3

4.8.2 P4 — 10-pin wire crimp ED-CABLE-JST10

The ED-CABLE-JST10 prototype development cable is used to rapidly interface the MDrive optional encoder interface to the users controller. This 10' (3.0 m) cable consists of a 10-pin locking wire crimp connector to plug directly into the MDrive optional P4 connector with ying leads on the opposite end to interface a control device.

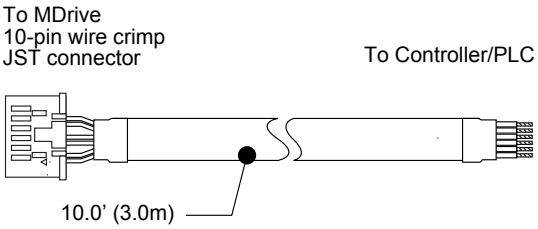

Pair	Wire Colors	Function
1	White/Blue	IDX+
	Blue/White	IDX-
2	White/Orange	CH B+
	Orange/White	CH B-
3	White/Green	CH A+
	Green/White	CH A-
4	White/Brown	Ground
	Brown/White	N/C

Figure 4.5 Encoder interface cable ED-CABLE-JST10

4.9 Mating connector kits

Use to build your own cables. Kit contains 5 mating shells with pins. Cable not supplied. Manufacturer's crimp tool recommended.

Mates to connector:

P2 10-pin IDC CK-01

P1 12-pin wire crimp CK-03

P4 10-pin wire crimp (encoder) CK-13

Schneider Electric Motion USA
370 North Main Street, P.O. Box 457
Marlborough, CT 06447 - U.S.A.
Tel. +00 (1) 860 295-6102 - Fax +00 (1) 860 295-6107
e-mail: info@imshome.com
http://www.schneider-electric-motion.us

© Schneider Electric Motion USA All Rights Reserved.
REV031910
Product Disclaimer and most recent product information at www.schneider-electric-motion.us.

IMS
INTELLIGENT MOTION SYSTEMS, INC.

Schneider Electric